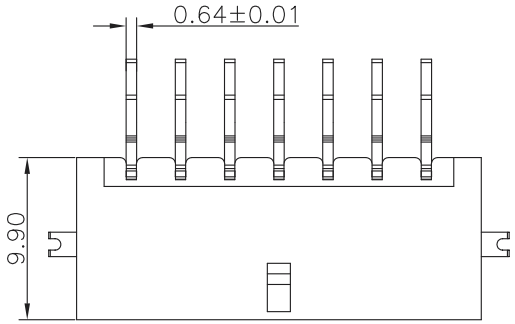

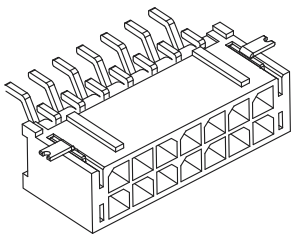

Specifications:

Current Rating:5.0A AC/DC
Voltage Rating:250V AC/DC
Contact Resistance:10m ohm. Max.
Insulation Resistance:1000M ohm. Min.
Withstanding Voltage:AC 1500V AC/minute
Operating Temperature Range:−25°C ~ +105°C
Material and Finish
Insulator:High Temp. Plastic (LCP UL94V−0)
Insulator Color:Black
Contact:Copper Alloy
Finish:Tin Plated

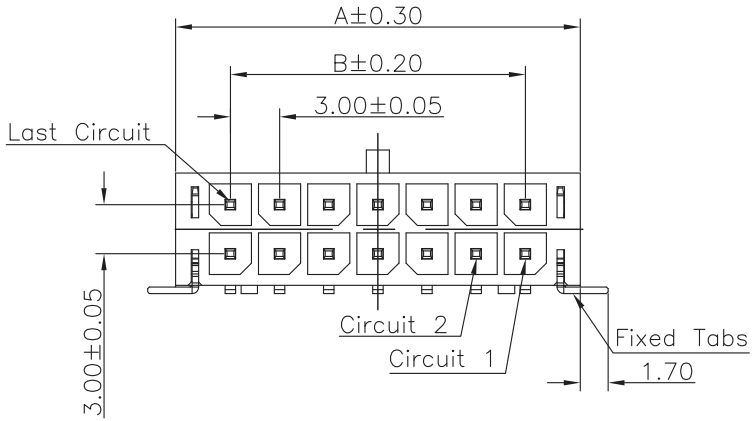

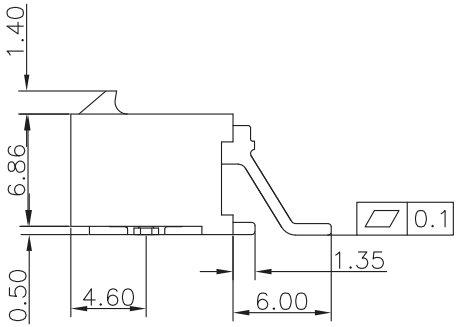

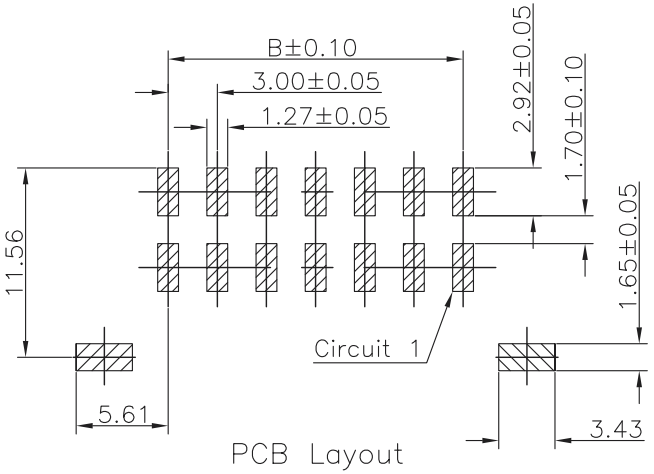

PCB Layout

Circuits	Dimension		Circuits	Dimension	
	A	B		A	B
2	6.7	—	14	24.7	18.0
4	9.7	3.0	16	27.7	21.0
6	12.7	6.0	18	30.7	24.0
8	15.7	9.0	20	33.7	27.0
10	18.7	12.0	22	36.7	30.0
12	21.7	15.0	24	39.7	33.0

RoHS Compliant

MORETHANALL PCB CONNECTORS Cable ASSEMBLIES
煜倫股份有限公司
www.morethanall.com

DRAWING BY CY		TOLERANCES ARE
CHECKED BY GENIUS		X. ±
UNIT / mm	SCALE 1 : 1	.X ± 0.20
		.XX ± 0.15
DATE		.XXX ±
		ANG ±
SIZE A4	PPOJECTION	

照片框

ORDER INFORMATION

MIF-PWER-2Xxx-LF

SERIES
MALE
90°SMT
EAR
REEL
2X01:02 WAY
2X12:24 WAY
LEADFREE

DESCRIPTION: 3.0mm Pitch Power Wafer SMD Type

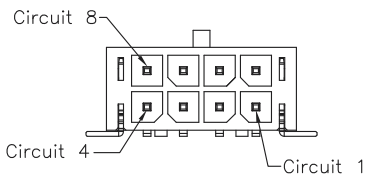

8PIN

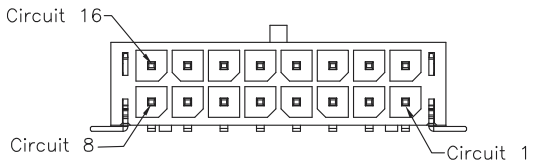

16PIN

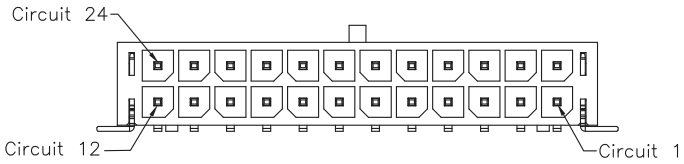

24PIN

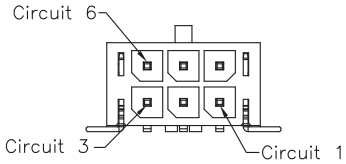

6PIN

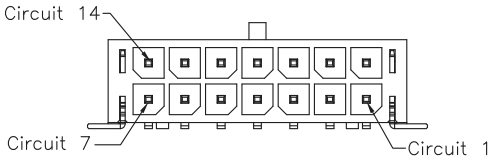

14PIN

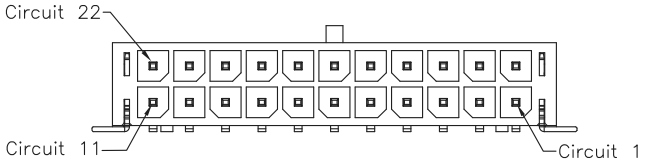

22PIN

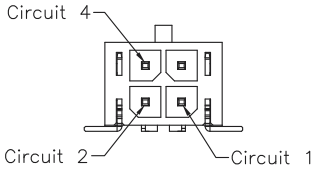

4PIN

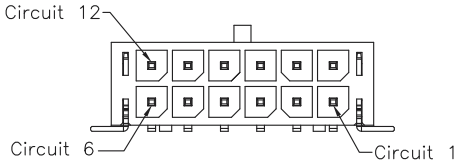

12PIN

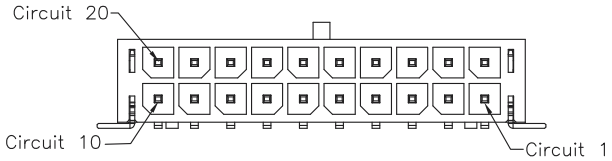

20PIN

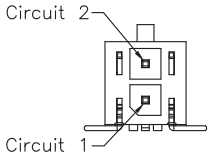

2PIN

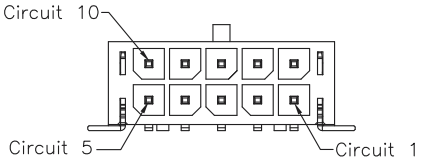

10PIN

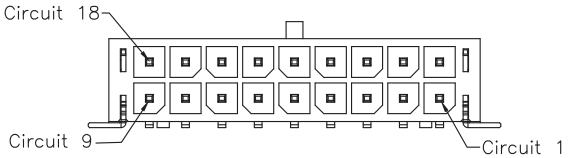

18PIN

2~24P Protection Key Drawing(Ref.)

RoHS Compliant

MORETHANALL
PCB CONNECTORS
Cable ASSEMBLIES
煜倫股份有限公司
www.morethanall.com

DRAWING BY CY		TOLERANCES ARE
CHECKED BY GENIUS		X. ±
UNIT / mm	SCALE 1 : 1	.X ± 0.20
		.XX ± 0.15
DATE		.XXX ±
		ANG ±
SIZE A4	PPOJECTION	

照片框

ORDER INFORMATION

MIF-PWER-2Xxx-LF

- SERIES
- MALE
- 90°SMT
- EAR
- REEL
- 2X01:02 WAY
- 2X12:24 WAY
- LEADFREE

DESCRIPTION: 3.0mm Pitch Power Wafer SMD Type

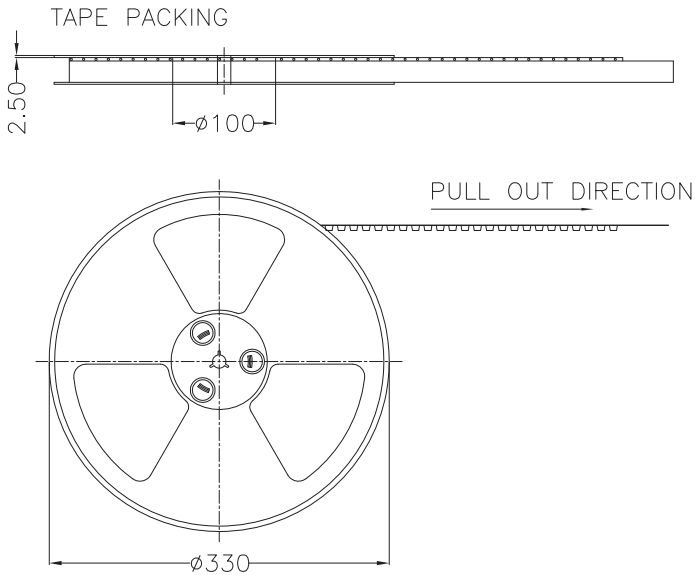

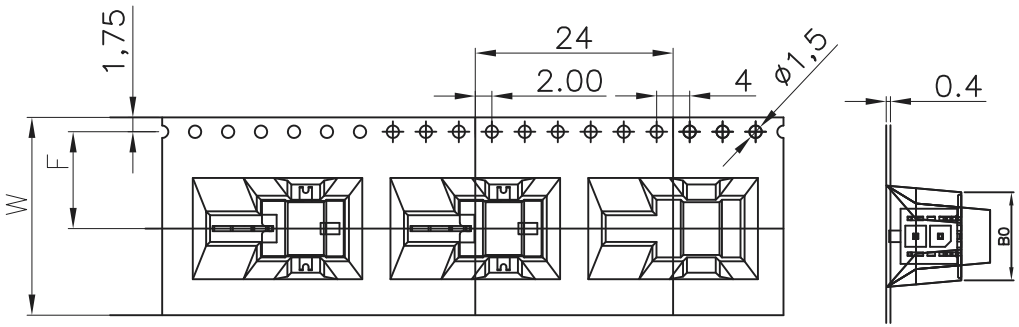

For Reel width (dimension W)24mm Single row hole

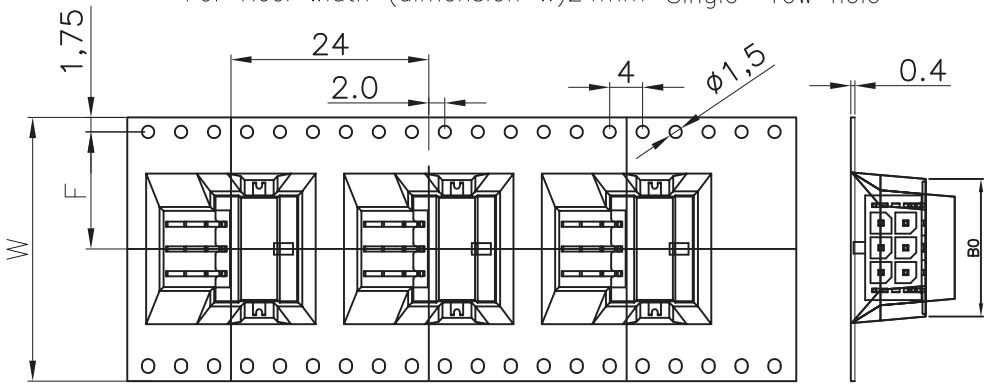

For Reel width (dimension W)32,44,56mm Double rows hole

Pin.	W	F	Pcs/R	R/Carton	Pcs/Carton
2	24	11.5	200	9	1800
4	24	11.5	200	9	1800
6	32	14.2	200	7	1400
8	44	20.2	200	5	1000
10	44	20.2	200	5	1000
12	44	20.2	200	5	1000
14	44	20.2	200	5	1000
16	56	26.2	200	4	800
18	56	26.2	200	4	800
20	56	26.2	200	4	800
22	56	26.2	200	4	800
24	56	26.2	200	4	800

Note:

1.All dimensions meet EIA-481-3 requirements.

2.Material : BK Conductive Polystyrene Alloy
100% recyclable.

3.Thickness : 0.40±0.05mm

4.Component load per 13" reel :200 pcs.

5.Carton Size:350*350*296(mm)

RoHS Compliant

MORETHANALL
PCB CONNECTORS
Cable ASSEMBLIES
煜倫股份有限公司
www.morethanall.com

DRAWING BY CY		TOLERANCES ARE
CHECKED BY GENIUS		X. ±
UNIT / mm	SCALE 1 : 1	.X ±
		.XX ±
DATE		.XXX ±
		ANG ±
SIZE A4	PPOJECTION	

照片框

ORDER INFORMATION

MIF-PWER-2Xxx-LF

SERIES
MALE
90°SMT
EAR
REEL
2X01:02 WAY
2X12:24 WAY
LEADFREE

DESCRIPTION: 3.0mm Pitch Power Wafer SMD Type Packing List