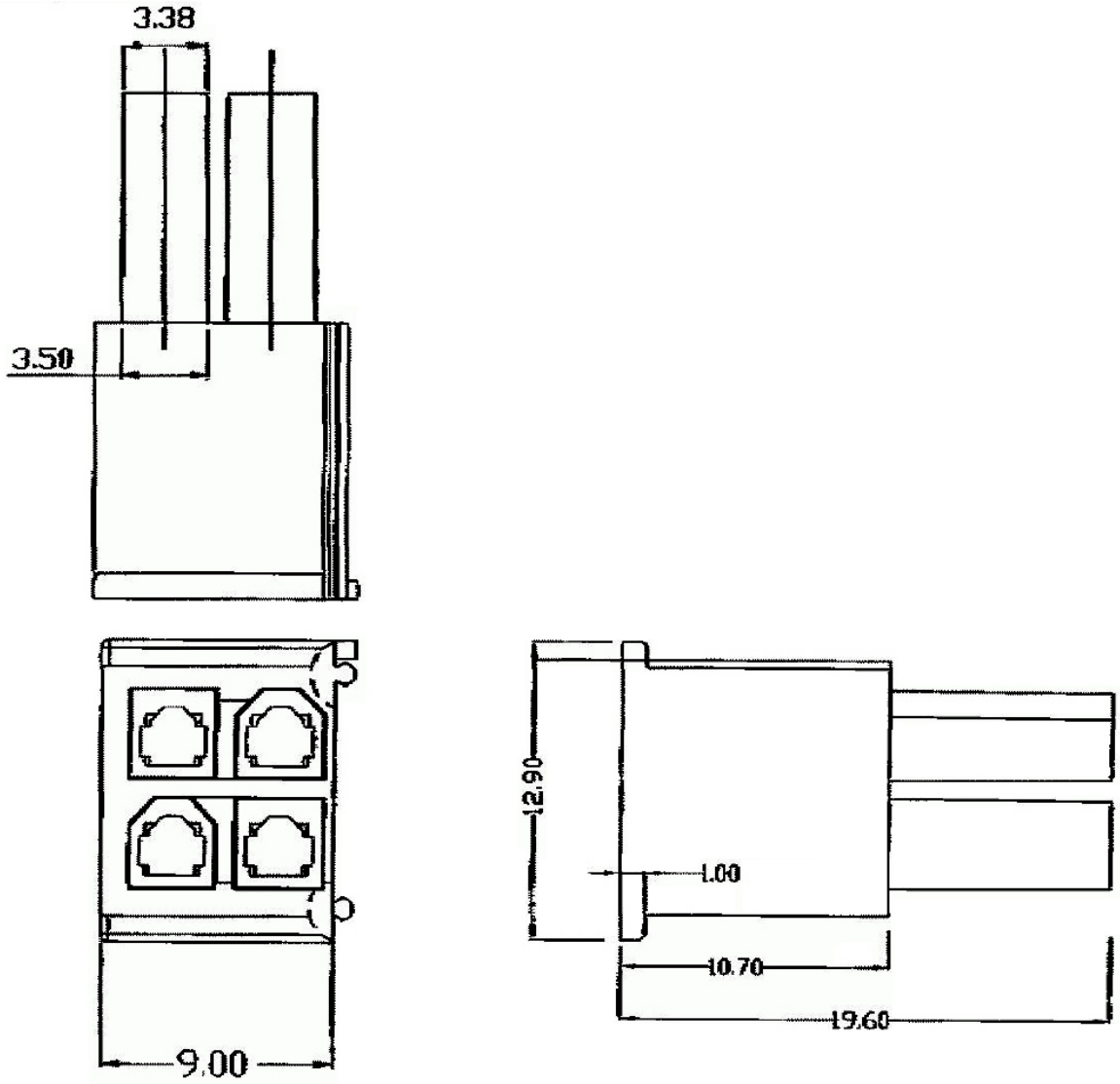

RoHS Compliant

MORETHANALL
PCB CONNECTORS
Cable ASSEMBLIES
煜倫股份有限公司
www.morethanall.com

DRAWING BY CY		TOLERANCES ARE
CHECKED BY GENIUS		X. ± .X ± .XX ± .XXX ± ANG ±
UNIT / mm	SCALE 1 : 1	
DATE		
SIZE A4	PPOJECTION	

照片框

ORDER INFORMATION

MF-SHHP-2X02-LF

- SERIES
- FEMALE
- HOUSING
- HOOK POINT
- 04 WAY
- LEADFREE

DESCRIPTION: