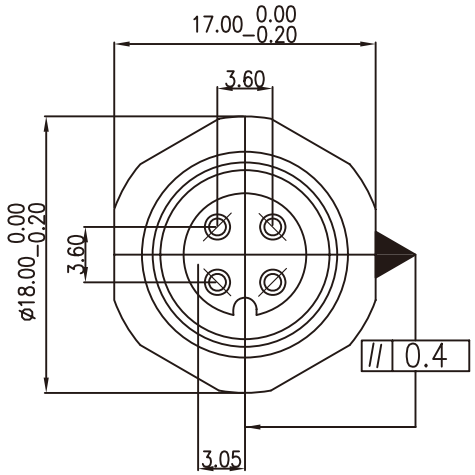

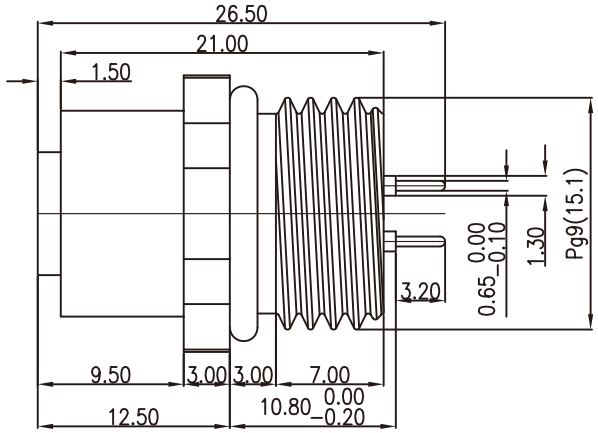

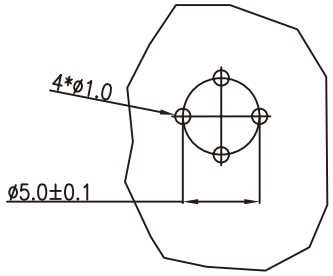

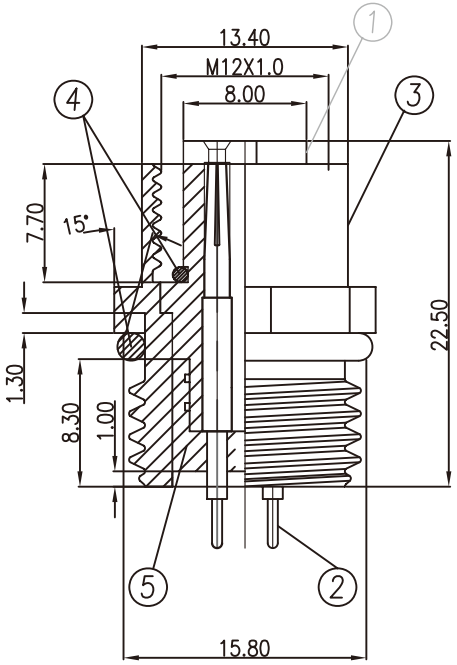

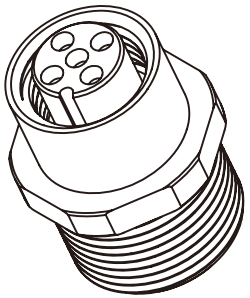

TABLE A

Item	Description	Material	UL File No.
1	Insulation	1403G6	E130155
2	Pin	JIS H3250 C3604 BD	
3	Shell	C3604	
4	O-Ring	NBR	
5	YGLUE	5339A/B	E105126

1. MATERIAL
   INSULATION: THERMOPLASTIC UL94V-0
   COLOR: BLACK.
   CONTACT: BRASS
   SHELL: BRASS
2. PLATING
   CONTACT: CONTACT PLATED 30u" GOLD,
   Shell:NICKEL 100u"
3. SPECIFICATION
   CURRENT: 2 A.
   OPERATING TEMPERATURE: -20° C TO 105° C.
   INSULATION RESISTAMCE: 1000 MEGAOHMS MIN.
   DIELECTRIC STRENGTH: 500V AC MIN.

RoHS Compliant

MORETHANALL
PCB CONNECTORS
Cable ASSEMBLIES
煜倫股份有限公司
www.morethanall.com

DRAWING BY CY		TOLERANCES ARE
CHECKED BY GENIUS		X. ±
UNIT / mm	SCALE 1 : 1	.X ±
		.XX ±
DATE		.XXX ±
		ANG ±
SIZE A4	PPOJECTION	

照片框

ORDER INFORMATION

M12-SDPANO-04-LF

SERIES
FEMALE
DIP 180°
PANEL FRONT
NUT
O-RING
04 WAY
LEADFREE

DESCRIPTION: