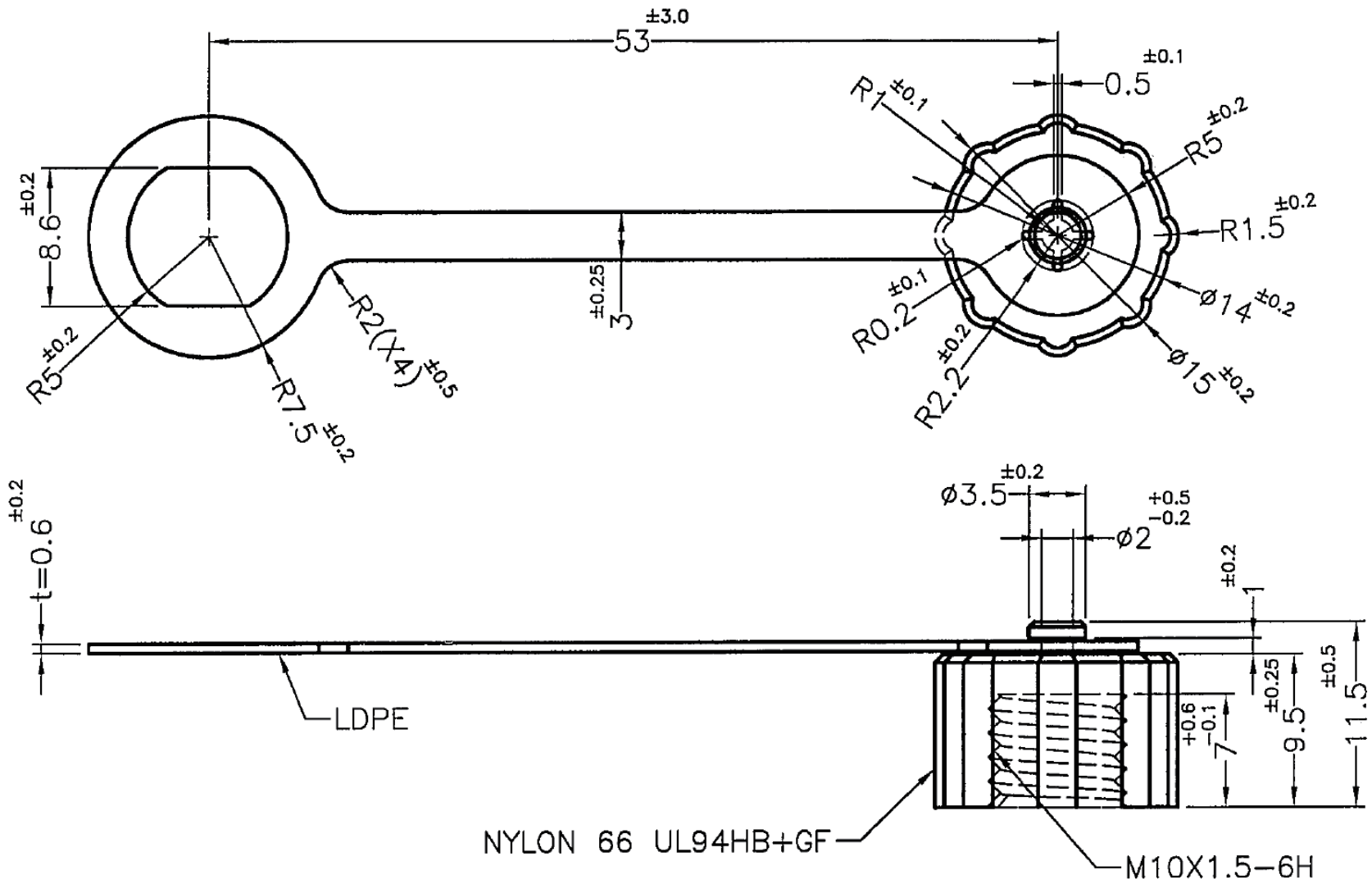

RoHS Compliant

MORETHANALL PCB CONNECTORS Cable ASSEMBLIES
煜倫股份有限公司
www.morethanall.com

DRAWING BY CY		TOLERANCES ARE
CHECKED BY GENIUS		X. ±
UNIT / mm	SCALE 1 : 1	.X ±
		.XX ±
		.XXX ±
DATE		ANG ±
SIZE A4	PPOJECTION	

照片框

ORDER INFORMATION

M10-CC-53-LF

SERIES | CAP+CHAIN | 53mm | LEADFREE

DESCRIPTION: CAP SENSING POINT SELF RETAINING COLOR BLACK