Current Rating:	3 Amps
Insulator Resistance:	5000 Megohms min
Dielectric Withstanding:	1000 VAC
Contact Resistance:	20 m ohms max.
Operating Temperature:	- 40° ~ +105° C
Contact Material:	Copper Alloy
Insulator Material:	Polyester,UL 94V-0 Standard: PBT

Finish: Gold Plated or Duplex Plated

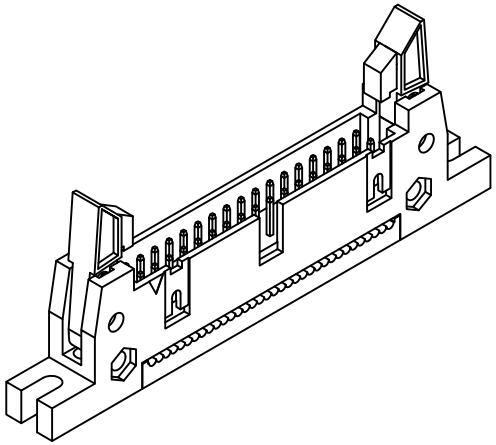

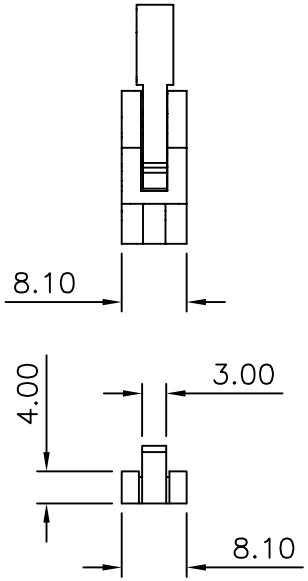

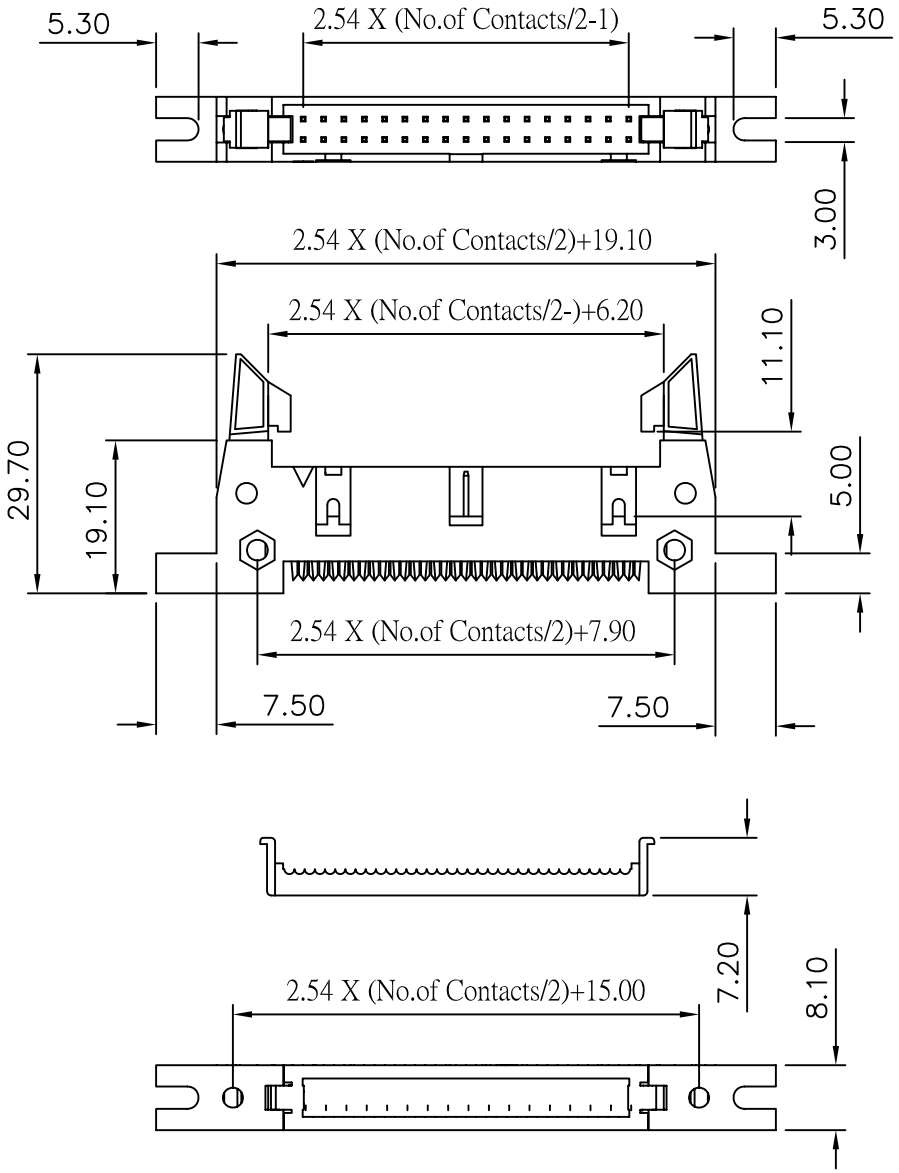

RoHS Compliant

MORETHANALL
PCB CONNECTORS
Cable ASSEMBLIES
煜倫股份有限公司
www.morethanall.com

DRAWING BY CY	
CHECKED BY GENIUS	
UNIT / mm	SCALE 1 : 1
DATE	
SIZE A4	PPOJECTION

TOLERANCES ARE
X. ±
.X ± 0.30
.XX ± 0.20
.XXX ± 0.10
ANG ±

照片框

ORDER INFORMATION

L-C2HESL-xx-LF

- SERIES
- TWO TYPE
- HALF EAR
- SHORT LATCH
- 10~64WAY
- LEADFREE

DESCRIPTION: