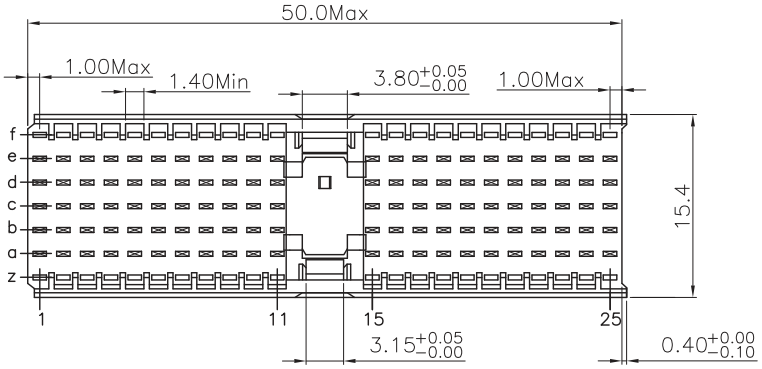


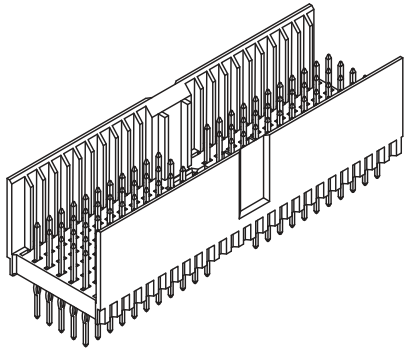

**Material:**

Housing: 30% Glass Filled PBT UL94V-0.
Contacts: Phosphor Bronze.

**Electrical Characteristics:**

Insulator Resistance: 100MΩ min. at DC 500V.
Contact Resistance: 20mΩ max. at DC 100mA.
Operating Temperature: -55°C~+125°C .

***RoHS Compliant**

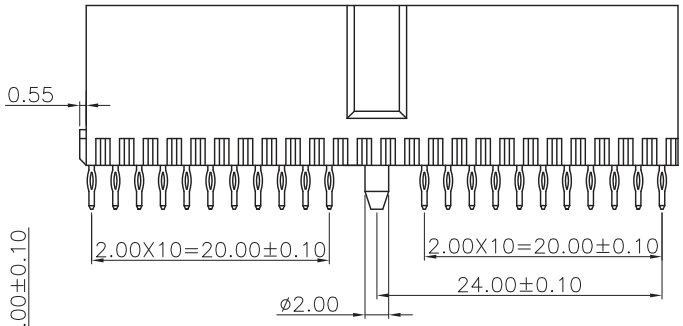


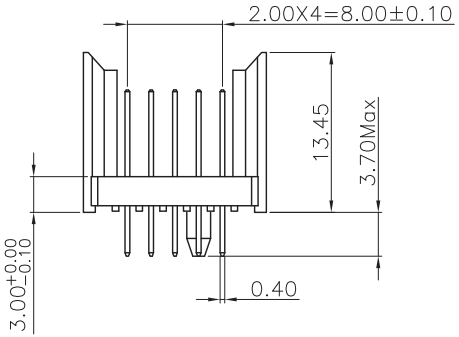


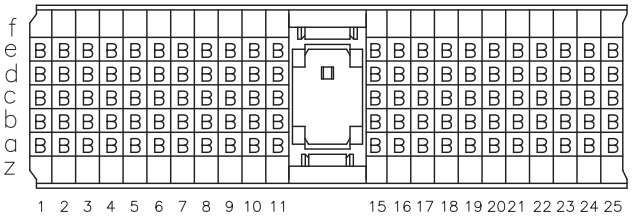


CONTACT LAYOUT

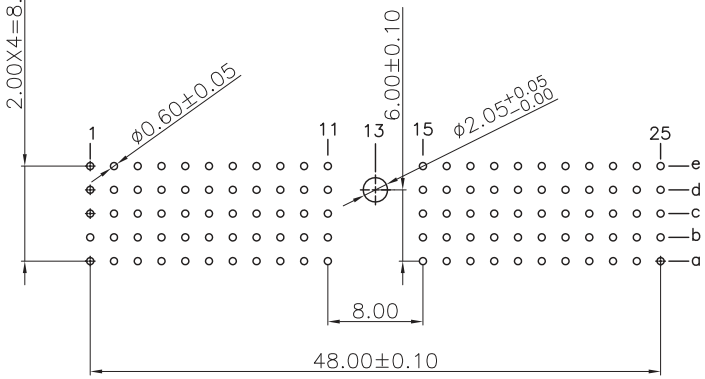


P.C. Board Layout
(Top View)

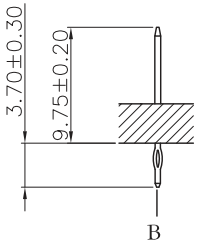


| | | |
|---|---|---|
| RoHS Compliant | | TOLERANCES ARE |
| MORETHANALL PCB CONNECTORS Cable ASSEMBLIES 煜倫股份有限公司 | DRAWING BY CY | X. ± 0.50 |
| | CHECKED BY GENIUS | .X ± 0.25 |
| | UNIT / mm / SCALE 1 : 1 | .XX ± 0.15 |
| | DATE | .XXX ± |
| www.morethanall.com | SIZE A4 / PPOJECTION | ANG ± |

照片框

**ORDER INFORMATION**

HM7A-PP03B-110-LF

- SERIES
- MALE
- PRESS FIT
- 3.7mm
- B TYPE
- 110 WAY
- LEADFREE

DESCRIPTION: 2.00 Hard Metric Connectors Male Type B