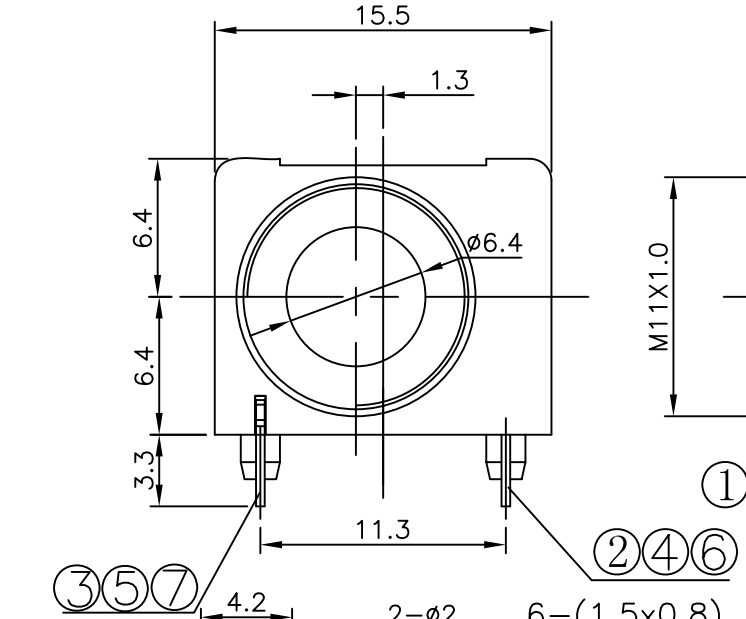

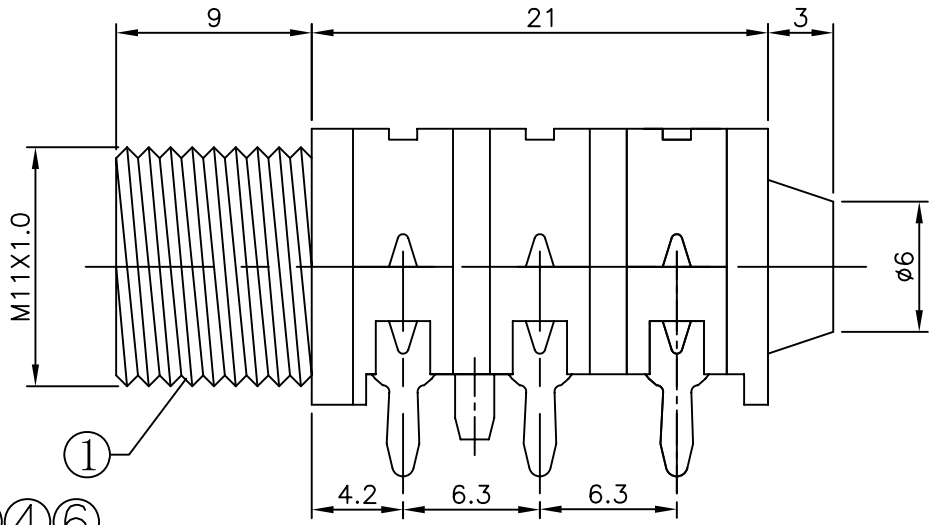

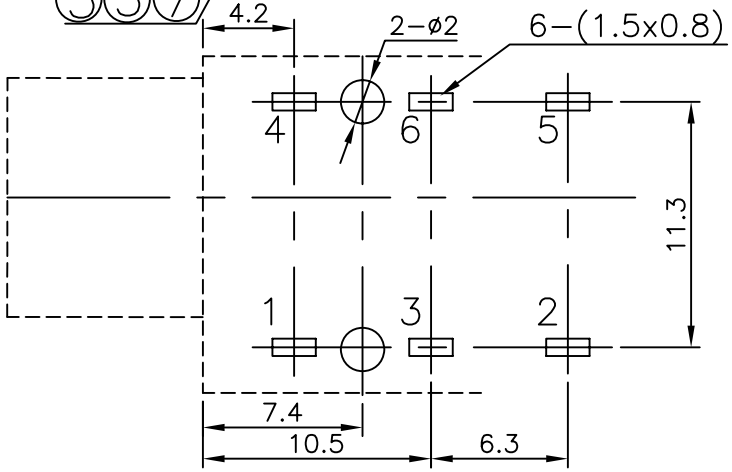

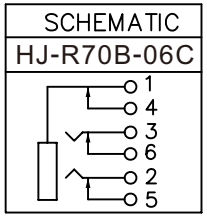

LTR	PART NAME	QTY	MATERIAL	REMARK
7	CONTACT FOOT	1	C2680	Ag PLATED
6	SPRING	1	C5191	Sn PLATED
5	CONTACT FOOT	1	C2680	Ag PLATED
4	SPRING	1	C5191	Sn PLATED
3	EARTH FOOT	1	C2680	Ag PLATED
2	SPRING	1	C5191	Sn PLATED
1	HOUSING	1	PBT 4815	UL-94V0(BLACK)

T:1.6 Dimensions of PC board holes

Tolerance : ±0.05(Printed-top view)

UNLESS OTHERWISE SPECIFIED, TOLERANCE ON DECIMAL: ±0.3

RoHS Compliant

MORETHANALL PCB CONNECTORS Cable ASSEMBLIES

煜倫股份有限公司

www.morethanall.com

DRAWING BY CY	
CHECKED BY GENIUS	
UNIT / mm	SCALE 1 : 1
DATE	
SIZE A4	PPOJECTION

TOLERANCES ARE
X. ±
.X ±
.XX ±
.XXX ±
ANG ±

照片框

ORDER INFORMATION

HJ-R70B-06C-LF

SERIES
DIP 90°
7.4mm
POSTx2
6P3C
LEADFREE

DESCRIPTION: PHONE JACK