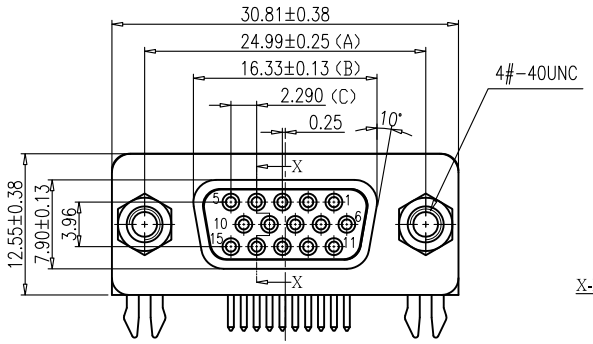

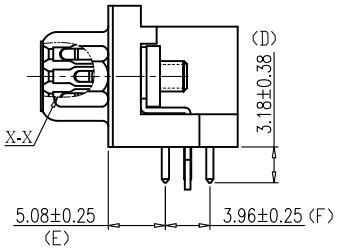

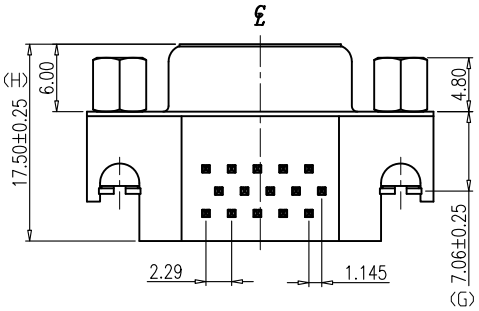

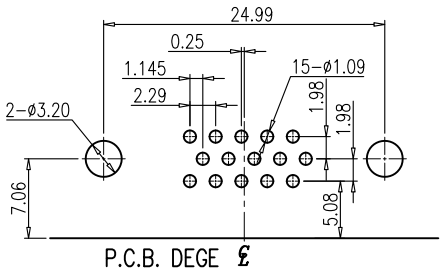

RECOMMENDED P.C.B. LAYOUT

INSPECTION DIMENSION:(A)~(H)

NOTES

1. MATERIAL:
   Housing:PBT, UL 94V-0, Color:Blue.
   Terminal:Copper Alloy.
   Shell:SPCC.
   Boardlock:Copper Alloy.
   Rivet:Copper Alloy.
   Screw:Copper Alloy.
2. FINISH:
   Terminal:Gold Plated over Nickel at Contact Area.
   Tin Plated over Nickel at Solder Ared.
   Shell:Nickel Plated.
   Boardlock:Tin Plated.
   Rivet:Nickel Plated.
   Screw:Nickel Plated.
3. This Product is LEAD-FREE & RoHS Compliance Product.

SPECIFICATIONS

1. D-SUB
1.1 Voltage: 250 VAC(RMS) Max.
1.2 Current Rating: 3 Ampere per Contact
1.3 Contact Resistance: 25 Milliohms Max.
1.4 Insulation Resistance: 5000 Megohms Min.
1.5 Dielectric Withstanding Voltage: 1000 VAC(RMS)
1.6 Total Mating Force: 6.0 Kgf Max.
1.7 Total Unmating Force: 1.2 Kgf Min.
1.8 Operating Temperature: -55°C to +85°C

RoHS Compliant

MORETHANALL PCB CONNECTORS Cable ASSEMBLIES
煜倫股份有限公司
www.morethanall.com

DRAWING BY CY		TOLERANCES ARE
CHECKED BY GENIUS		X. ±
UNIT / mm	SCALE 1 : 1	.X ±
		.XX ± 0.25
DATE		.XXX ± 0.13
		ANG ± 2°
SIZE A4	PPOJECTION	

照片框

ORDER INFORMATION

HDR50-SSNJBL-15S9-LF

SERIES
FEMALE
SEMI GOLD
NUT
JACKSCREW
BLUE
15WAY
SHORT PIN #9
LEADFREE

DESCRIPTION: SHORT BODY D-SUB CONNECTOR 0.20"(5.08mm) FOOTPRINT,RIGHT ANGLE