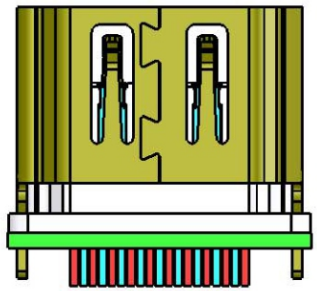

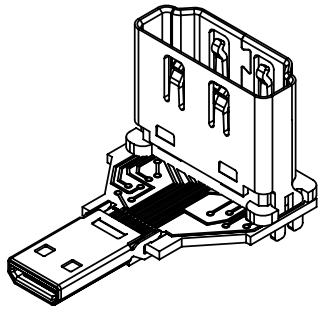

NOTES :
1.Material :
Housing : High temperature thermoplastic,UL94-V0.
Color : Black
HDMI Terminal : Copper Alloy.
Cover : Copper Alloy.
2.Finish :
Terminal : Underplate : 50μ" MIN. Ni over all.
Solder tail : 100μ" MIN. Lead free over Ni plate.
Cover : Underplate :50 μ" MIN. Ni Solderability over all.
Solder tail : 1μ" MIN. Au over Ni plate.
3.Coplanarity Must Be Within 0.10 Max.

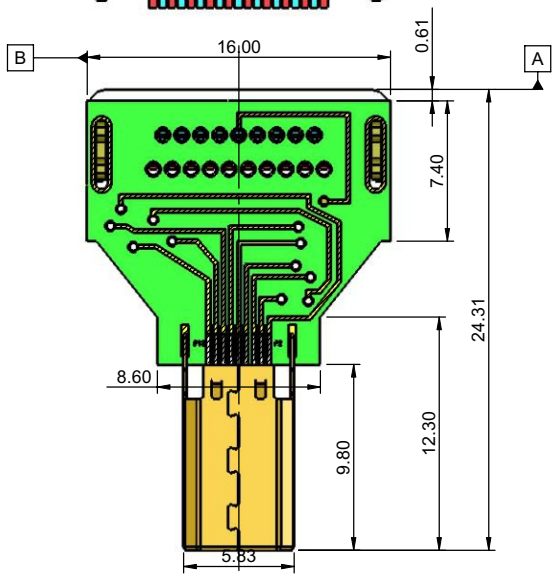

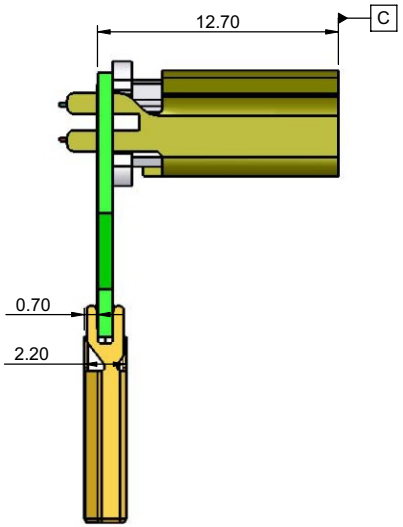

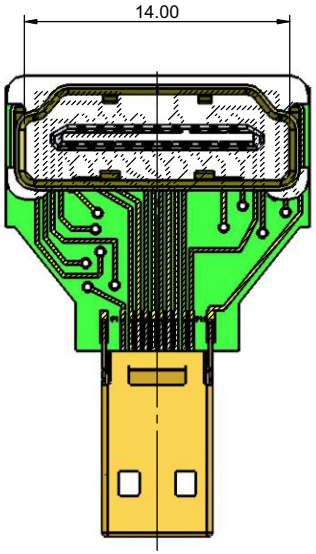

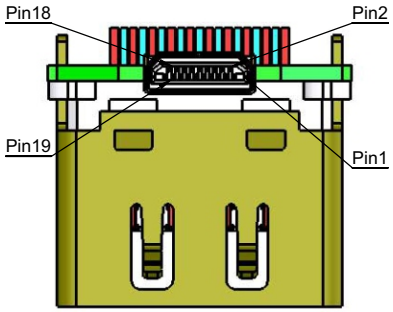

HDMIMIHDMI-ABL-1919-LF
LEADFREE

RoHS Compliant

MORETHANALL CONNECTORS ASSEMBLIES	PART NO. HDMIMIHDMI-ABL-1919						
	DWG NO. HDMIMIHDMI-ABL-1919	CHECKED BY CY	TOLERANCES ARE .X ± .XX ± .XXX ± AWG	DESCRIP TION:	直立式HDMI TYPE D Male TO A Female CONNECTOR		
煜倫股份有限公司	FILE NO.	DRAWING BY					
	UNIT / mm	SCALE 1 : 1	PROJECTION	AREA	REVISIONS	HK	DATE