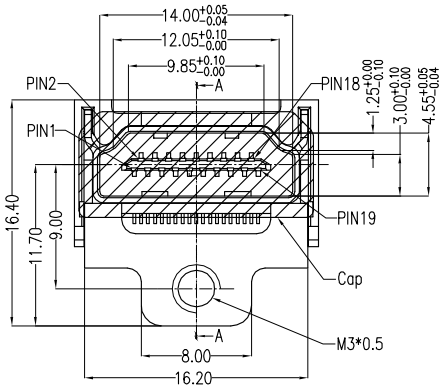

No.	Signal Name	No.	Signal Name
1	TMDS Data2+	11	TMDS Clock Shield
2	TMDS Data2 Shield	12	TMDS Clock-
3	TMDS Data2-	13	CEC
4	TMDS Data1+	14	Reserved (in cable but N.C. on device)
5	TMDS Data1 Shield	15	SCL
6	TMDS Data1-	16	SDA
7	TMDS Data0+	17	DDC/CEC Ground
8	TMDS Data0 Shield	18	+5V Power
9	TMDS Data0-	19	Hot Plug Detect
10	TMDS Clock+		

NOTES:

*Material

Housing&Cap: LCP+50%G.F., UL 94V-0 Rated;
Color: Black.
Shell: Brass.
Plating: Ni(40u" Min.) Plating.
Earth Fitting: Steel.
Plating: Ni(40u" Min.) Plating.
Contact: Brass.
Plating: Au plating on contact area;
Sn(100u" Min.) plating on solder tail;
Ni(40u" Min.) underplating overall.

*Electrical Specification

Operation Voltage: 40 VAC max.
Current Rating: 0.5 Ampere per contact
Contact Resistance: 10 mΩ max.
Insulation Resistance: 100MΩ min.
Dielectric Withstanding Voltage: 500 VAC

*Environmental

Operating Temperature: -20°C to +85°C

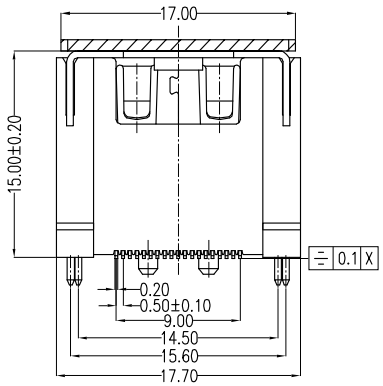

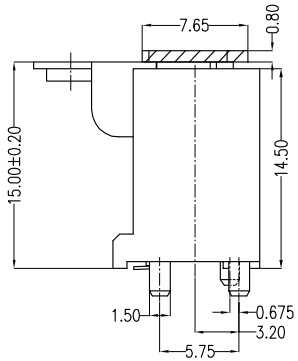

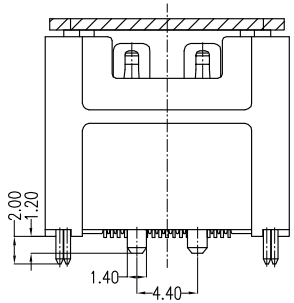

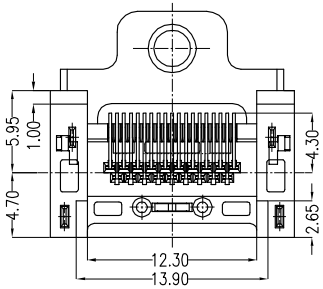

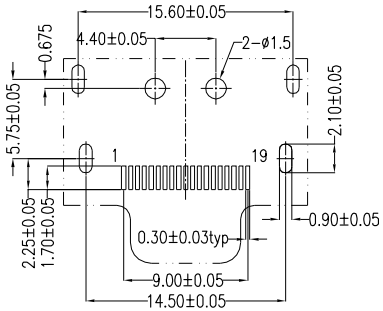

P.C.B LAYOUT
COMPONENT SIDE

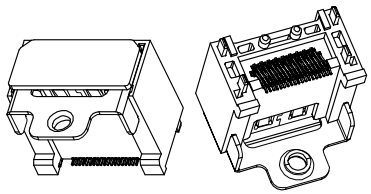

RoHS Compliant

MORETHANALL
PCB CONNECTORS
Cable ASSEMBLIES
煜倫股份有限公司
www.morethanall.com

DRAWING BY CY	
CHECKED BY GENIUS	
UNIT / mm	SCALE 1 : 1
DATE	
SIZE A4	PPOJECTION

TOLERANCES ARE
X. ±
.X ± 0.38
.XX ± 0.25
.XXX ± 0.20
ANG ±

照片框

ORDER INFORMATION

HDMI-SVM4PNC-19-LF

SERIES
FEMALE 180°SMT
METAL FOOT x 4
POST
NUT
MYLAR
19WAY
LEADFREE

DESCRIPTION: High Definition Media Interface 19PIN Vertical SMT Type(15.0)