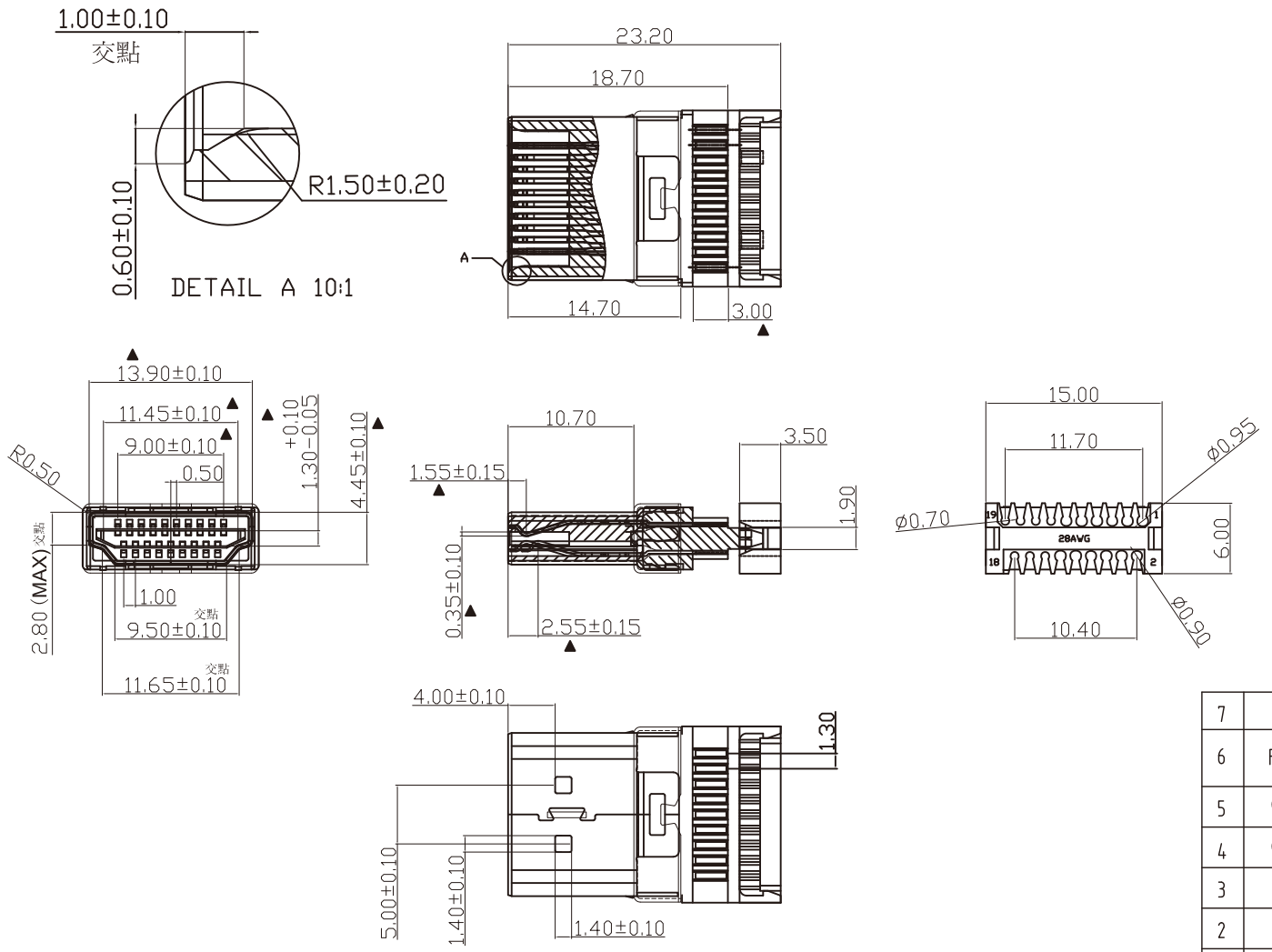

Note:

1.Material:

1.1 Housing: LCP / PA66, UL 94-V0 rated.
1.2 Contact: Phosphor Bronze, t=0.25mm.
1.3 Front Shell: Cold rolled steel, t=0.30mm.
1.4 Back Shell: Cold rolled steel, t=0.30mm.

2:Specification:

2.1 Current rating: 0.5 A Max.
2.2 Voltage rating: 40 V ac(rms) Max.
2.3 Contact resistance: 50 mW Max.
2.4 Dielectric withstanding voltage: 100 V(ac) for 1 min.
2.5 Insulation resistance:1000 MW Min.
2.6 Operation temperature range:-25°C~85°C

3.Finishes:

3.1 Contacts: Gold 5u",15u"30u",on Contact area . 100u-120u" 霧錫. Plating on soldertails. 50u"-80u" Nickel .underplating over all
3.2 front Shell: Gold flashed or Nickel Plated
3.3 back Shell: Tin Plated

4." ▲ "為重要尺寸符號;

No.	Part Name	Q'ty	Material	Thickness	Finish
7	BACK SHELL	1	Cold rolled steel	T=0.30±0.01mm	Tin Plated
6	FRONT SHELL	1	Cold rolled steel	T=0.30±0.01mm	Gold Flashed/ Nickel Plated
5	Contacts 1	10	Phosphor Bronze	T=0.25±0.01mm	Gold 15u"/5u"
4	Contacts 2	9	Phosphor Bronze	T=0.25±0.01mm	Gold 15u"/5u"
3	膠芯中塞	1	LCP		Black
2	膠芯主體	1	LCP		Black
1	膠芯後塞	1	PA66		Black

RoHS Compliant

MORETHANALL
PCB CONNECTORS
Cable ASSEMBLIES
煜倫股份有限公司
www.morethanall.com

DRAWING BY CY	
CHECKED BY GENIUS	
UNIT / mm	SCALE 1 : 1
DATE	
SIZE A4	PPOJECTION

TOLERANCES ARE
X. ±
.X ± 0.25
.XX ± 0.15
.XXX ± 0.05
ANG ±

ORDER INFORMATION

HDMI-PM28-19-LF

SERIES
MALE
MOLDING
28AWG
19 WAY
LEADFREE

DESCRIPTION: HDMI 19PIN MALE SOLDER(两排) (28#排線座)