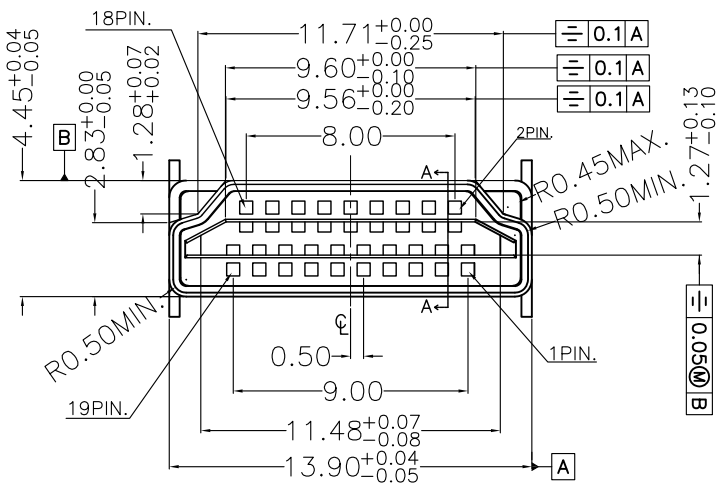

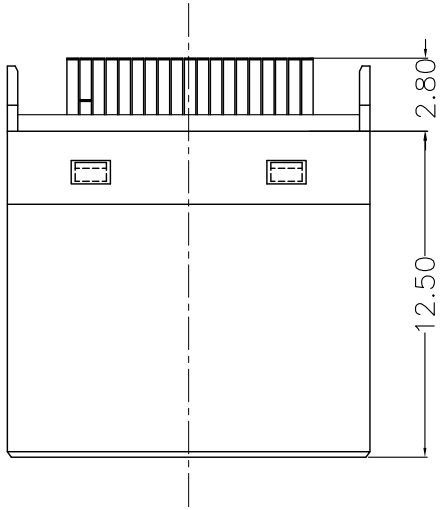

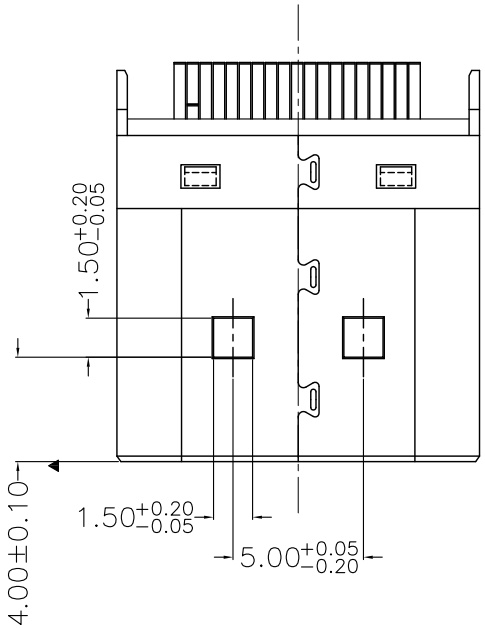

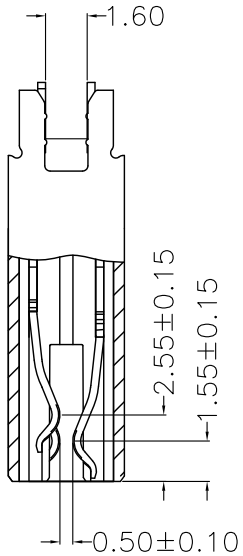

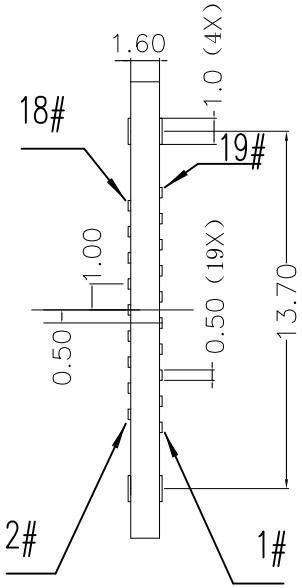

P.C.B
LAYOUT

规格:

1. 插入力:44.1N MAX.
2. 拔出力:7～25N
3. 耐久性:10000 CYCLES MIN.
4. 额定电流:0.5A
5. 额定电压:40V MAX
6. 耐电压:500V AC MIN.(UNMATED)
   300V AC MIN.(MATED)
7. 接触阻抗:30mΩ MAX.
8. 绝缘电阻:100MΩ MIN(UNMATED)
   10MΩ MIN(MATED)
9. 工作温度：-20℃ TO +85℃
10. 所用材质须合符RoHS要求

RoHS Compliant

MORETHANALL
PCB CONNECTORS
Cable ASSEMBLIES
煜倫股份有限公司
www.morethanall.com

DRAWING BY CY		TOLERANCES ARE
CHECKED BY GENIUS		X. ±
UNIT / mm	SCALE 1 : 1	.X ± 0.30
DATE		.XX ± 0.25
		.XXX ± 0.15
		ANG ± 2°
SIZE A4	PPOJECTION	

照片框

ORDER INFORMATION

HDMI-PE16-19-LF

SERIES
MALE
EDGE CLIP 1.6t
19WAY
LEADFREE

DESCRIPTION: HDMI A TYPE 公座夾板1.6