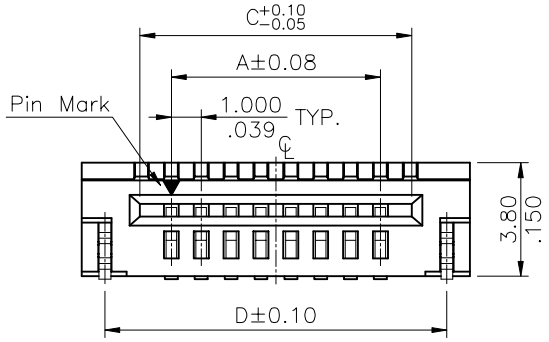

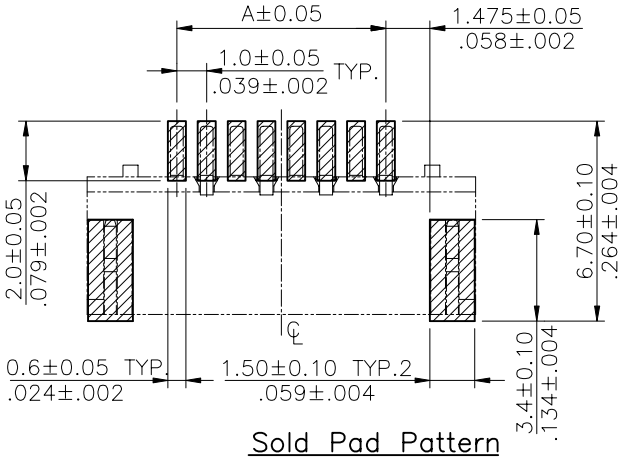

Sold Pad Pattern

Material:
* Insulation:
  High Temperature Polyamide UL 94V−0
  Color Nature
* Contact: Phosphor Bronze

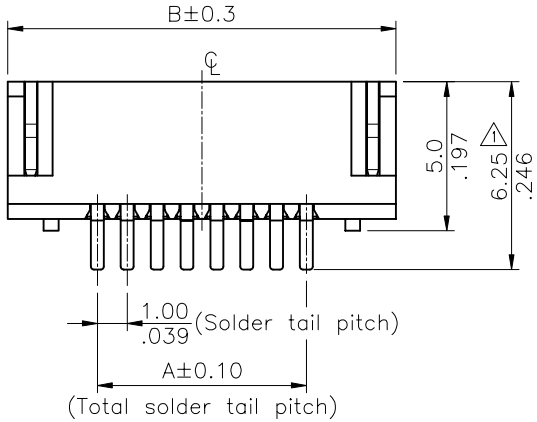

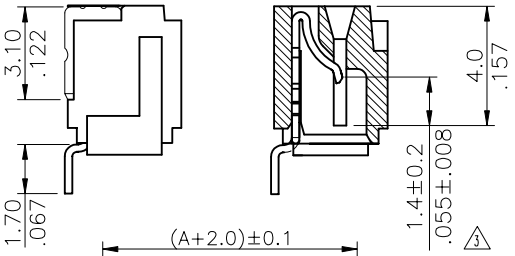

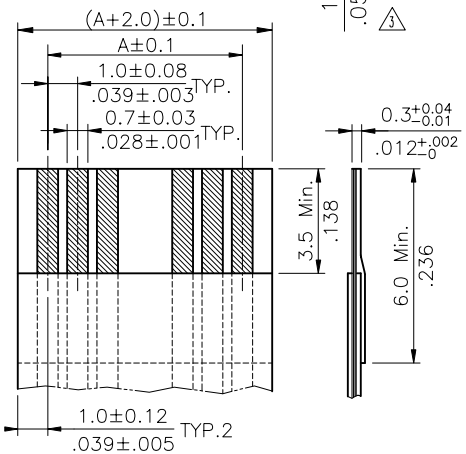

* ACCOMMODATED FFC

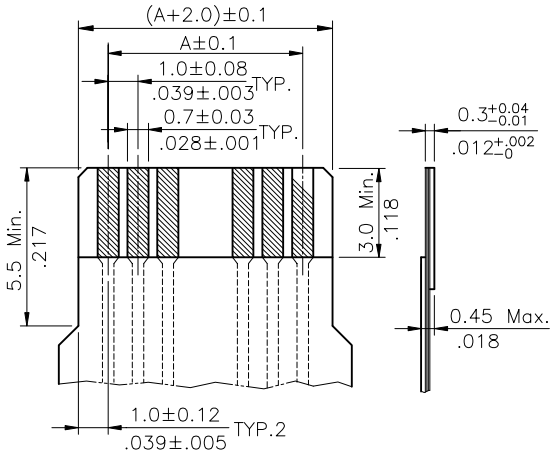

* ACCOMMODATED FPC

A = 1.00 * NO. OF SPACES
B = A + 6.0
C = A + 2.1
D = A + 4.45

* AVAILABLE IN 3 THROUGH 32 CIRCUITS

RoHS Compliant

MORETHANALL PCB CONNECTORS Cable ASSEMBLIES
煜倫股份有限公司
www.morethanall.com

DRAWING BY CY		TOLERANCES ARE
CHECKED BY GENIUS		X. ±
UNIT / mm	SCALE 1 : 1	.X ± 0.20
DATE		.XX ± 0.15
		.XXX ± 0.10
		ANG ±
SIZE A4	PPOJECTION	

照片框

ORDER INFORMATION

FPA-WLB38N-xx-LF

SERIES
90°SMT
NON ZIF
BOTTOM/CONTACT
HIGH 3.8mm
INNER EAR
03~32WAY
LEADFREE

DESCRIPTION: