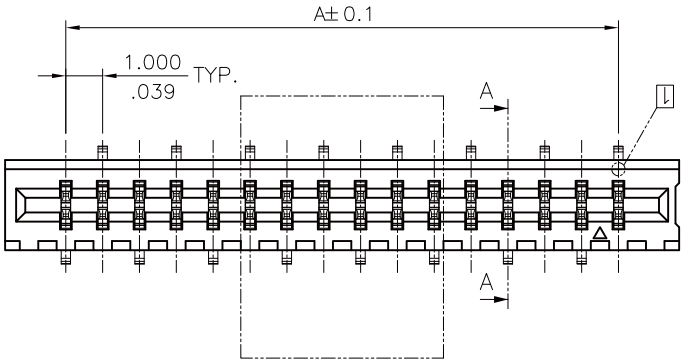

A = 1.0 * No. of Spaces
B = A + 3.3
C = A + 2.1
* Available in 4 through 32 circuits

Note :
1. Material :
* Body : Nylon 6T With 30% GF. UL 94-0
Color Black
* Contact : Copper alloy
2. For Lead Free IR Reflow Process

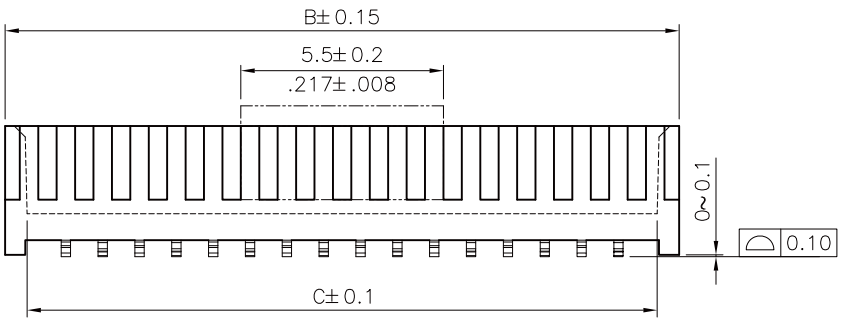

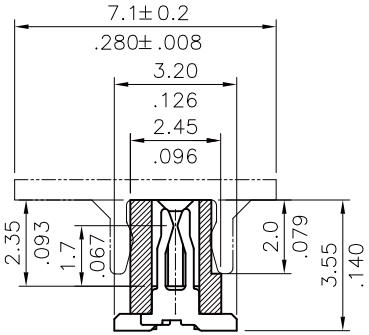

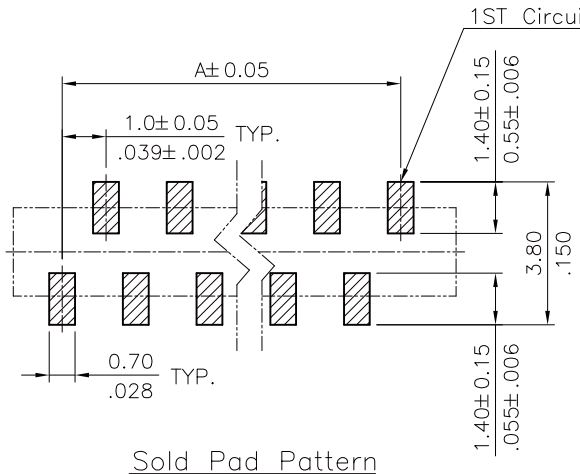

Sold Pad Pattern

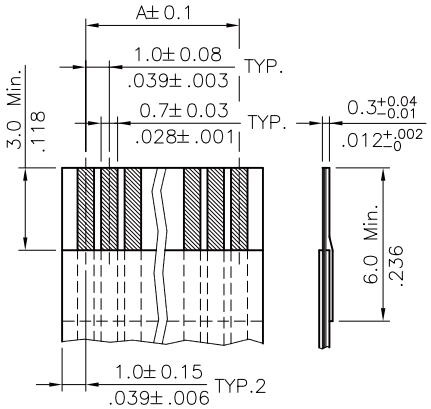

Accommodated FFC

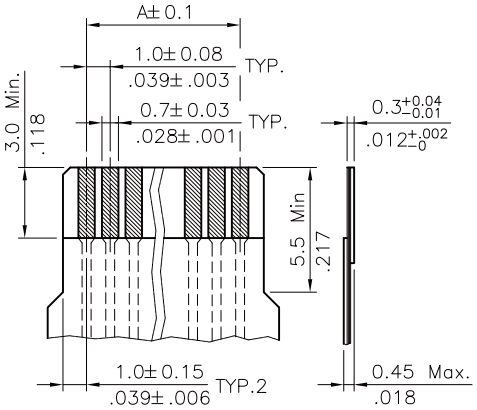

Accommodated FPC

RoHS Compliant

MORETHANALL
PCB CONNECTORS
Cable ASSEMBLIES
煜倫股份有限公司
www.morethanall.com

DRAWING BY CY		TOLERANCES ARE
CHECKED BY GENIUS		X. ±
UNIT / mm	SCALE 1 : 1	.X ± 0.15
DATE		.XX ± 0.10
		.XXX ± 0.05
		ANG ±
SIZE A4	PPOJECTION	

照片框

ORDER INFORMATION

FPA-VL2L35C-xx-LF

SERIES
180°SMT
NON ZIF
DUAL CONTACT
L TYPE FOOT
HIGH 3.55mm
CAP
04~32WAY
LEADFREE

DESCRIPTION: