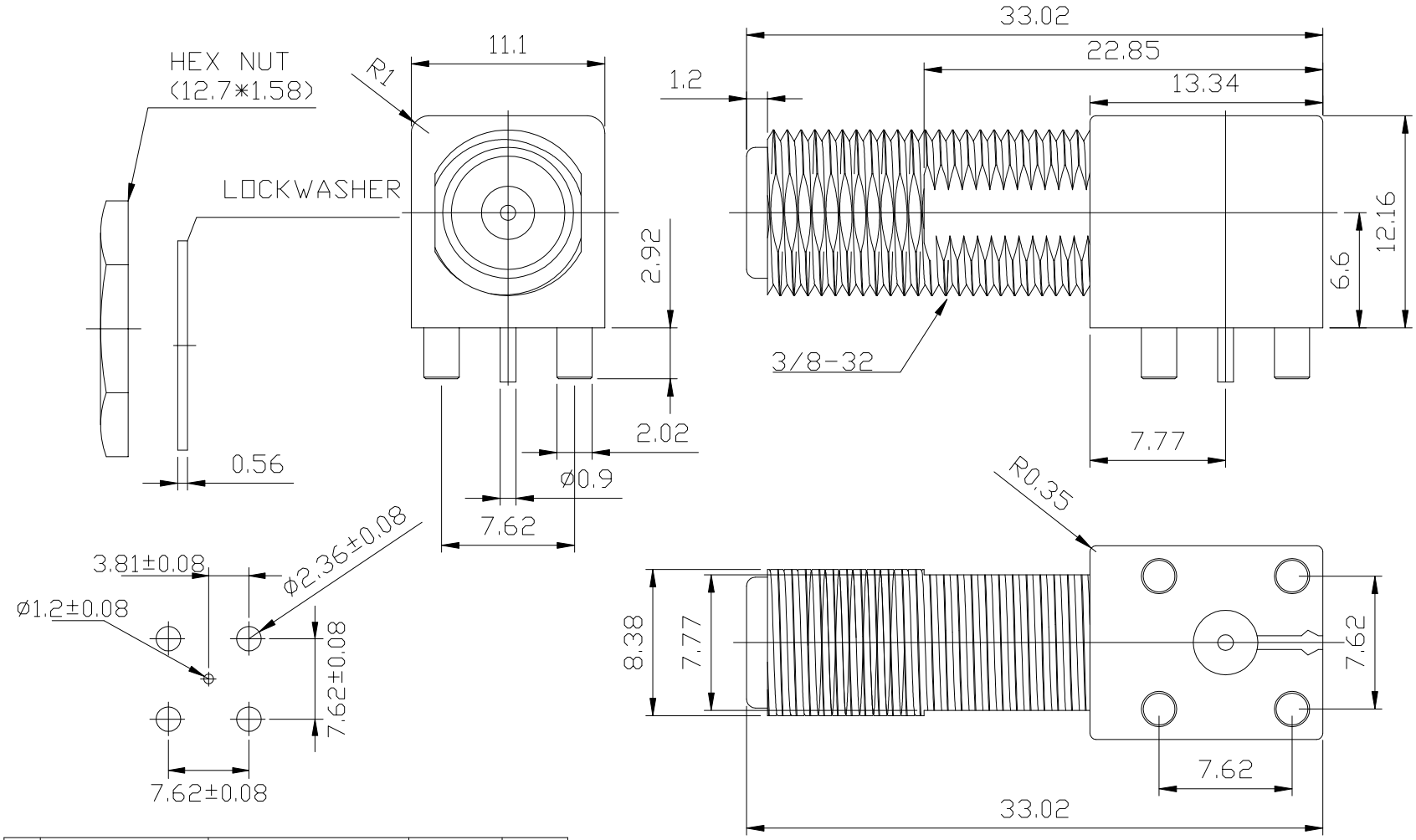

NO	DESCRIPTION	MATERIAL	FINISH	QTY
5	LOCKWASHER	STEEL	NICKEL	1
4	NUT	BRASS	NICKEL	1
3	DIELECTRIC	TPX	NONE	1
2	PIN	PHOSPHOR BRONZE	NICKEL	1
1	BODY	ZINC	TIN	1

RoHS Compliant

MORETHANALL PCB CONNECTORS Cable ASSEMBLIES
煜倫股份有限公司
www.morethanall.com

DRAWING BY CY
CHECKED BY GENIUS
UNIT / mm | SCALE 1 : 1
DATE
SIZE A4 PPOJECTION

TOLERANCES ARE
X. ±
.X ±
.XX ±
.XXX ±
ANG ±

照片框

ORDER INFORMATION

F-JRL33SF-75-LF

SERIES
JACK
DIP 90°
LONG 33.02mm
BOTH FLAT
75 OHM
LEADFREE

DESCRIPTION: RIGHT ANGLE F FEMALE P.C MOUNT