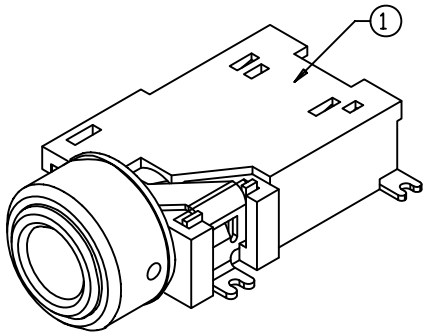

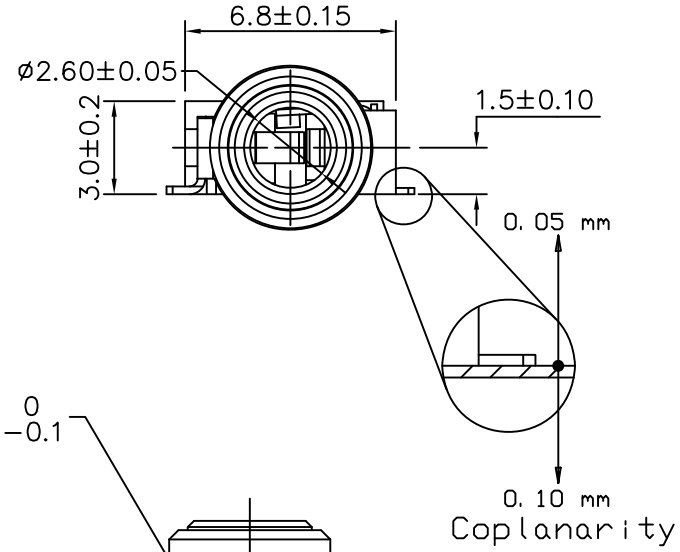

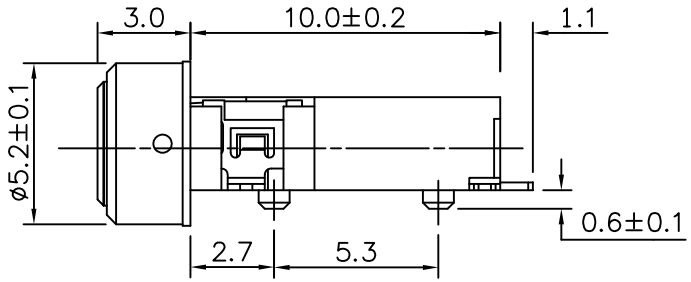

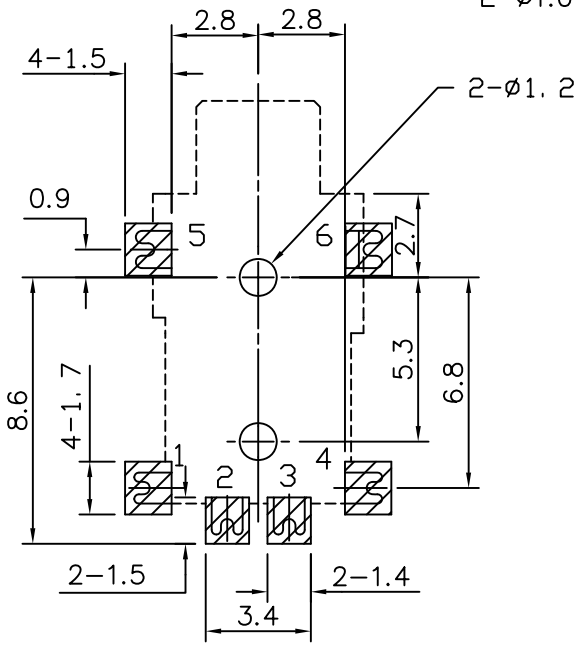

Recommended Pads Layout
<Top View>

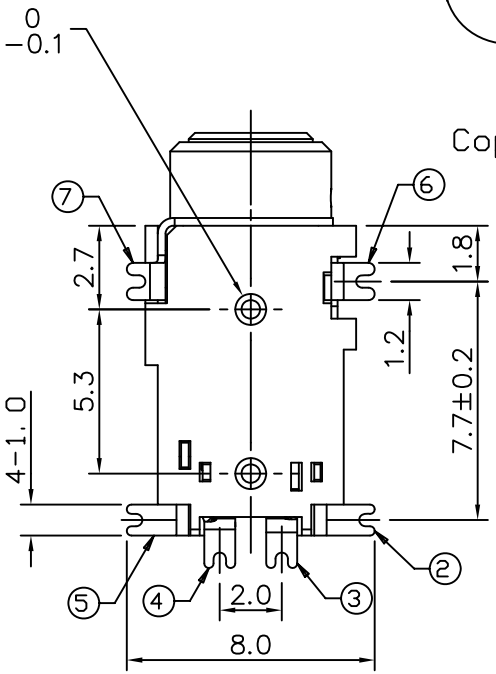

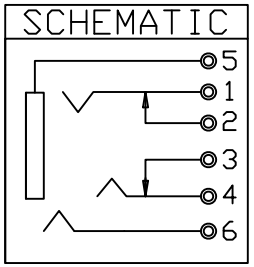

⑦	INNER RING	BRASS	Au	1	
⑥	GROUND CONTACT	PBS	Ag	1	
⑤	TIP CONTACT	Ti-Cu	Ag	1	
④	TIP SHUNT	BRASS	Ag	1	
③	RING SHUNT	BRASS	Ag	1	
②	RING CONTACT	Ti-Cu	Ag	1	
①	HOUSING	LCP		1	UL94V-0

RoHS Compliant

MORETHANALL PCB CONNECTORS Cable ASSEMBLIES
煜倫股份有限公司
www.morethanall.com

DRAWING BY CY	
CHECKED BY GENIUS	
UNIT / mm	SCALE 1 : 1
DATE	
SIZE A4	PPOJECTION

TOLERANCES ARE
X. ±
.X ±
.XX ±
.XXX ±
ANG ±

照片框

ORDER INFORMATION

EJ-W25M-06D-LF

- SERIES
- 90°SMT
- POST 2.7+5.3mm
- METAL
- 6P4C
- LEADFREE

DESCRIPTION: ø2.5mm EARPHONE JACK PLASTIC BUSHING