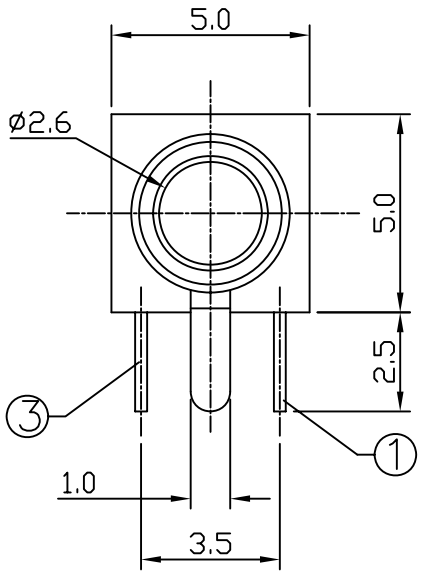

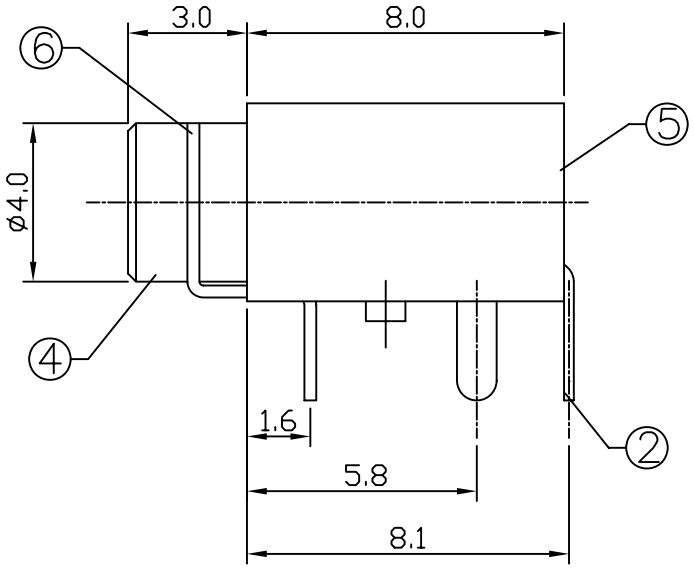

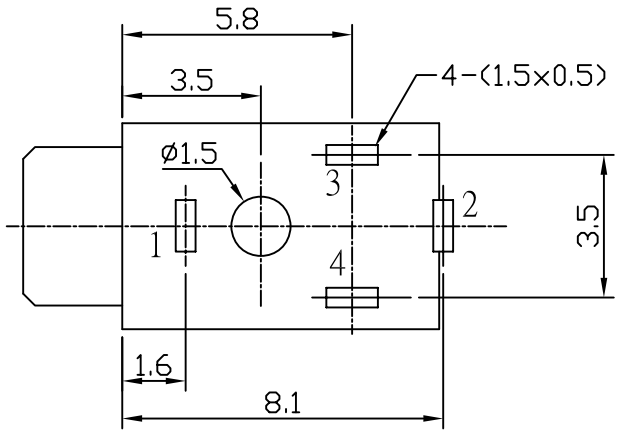

T:1.6 Dimensions of PC board holes

Tolerance : ±0.1(Printed-top view)

UNLESS OTHERWISE SPECIFIED, TOLERANCE ON DECIMAL:±0.3

SCHEMATIC

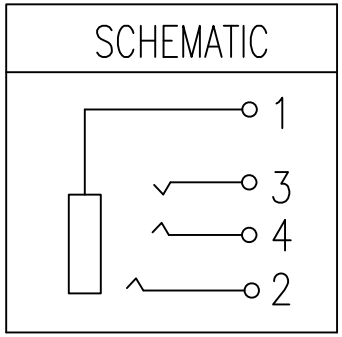

LTR	PART NAME	QTY	MATERIAL	REMARK
6	4# CONTACT FOOT	1	BRASS	MB:Cu Ag PLATED
5	HOUSING	1	PA66	UL-94V-0
4	AXIS SUPPORT	1	H59 BRASS	MB:Cu Ni PLATED
3	3# CONTACT FOOT	1	PHOSPHOR BRONZE	MB:Cu Ag PLATED
2	2# CONTACT FOOT	1	PHOSPHOR BRONZE	MB:Cu Ag PLATED
1	1# CONTACT FOOT	1	PHOSPHOR BRONZE	MB:Cu Ag PLATED

RoHS Compliant

MORETHANALL PCB CONNECTORS Cable ASSEMBLIES

煜倫股份有限公司

www.morethanall.com

DRAWING BY CY	
CHECKED BY GENIUS	
UNIT / mm	SCALE 1 : 1
DATE	
SIZE A4	PPOJECTION

TOLERANCES ARE
X. ±
.X ±
.XX ±
.XXX ±
ANG ±

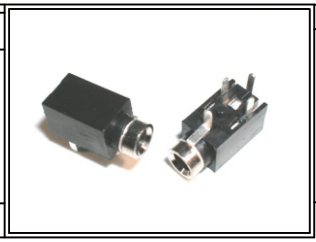

ORDER INFORMATION

EJ-R3M-04-LF

SERIES
3.0mm DIP 90°
METAL
4P
LEADFREE

DESCRIPTION: MINIATURE JACK