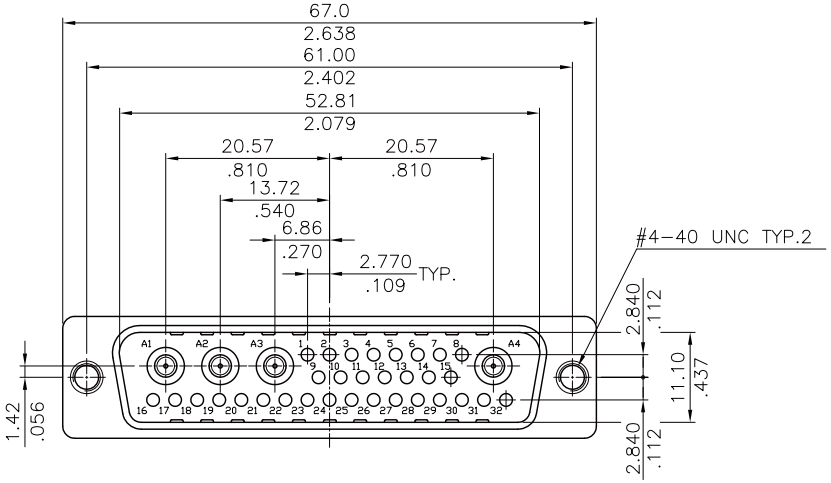

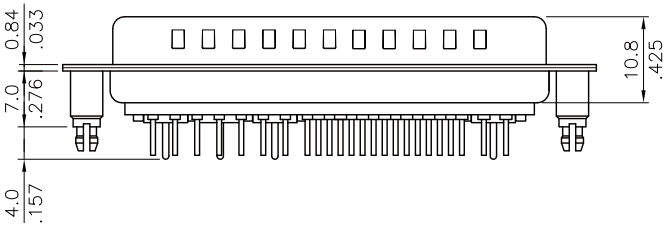

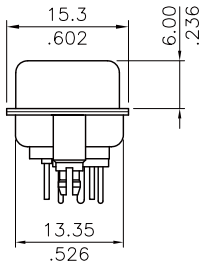

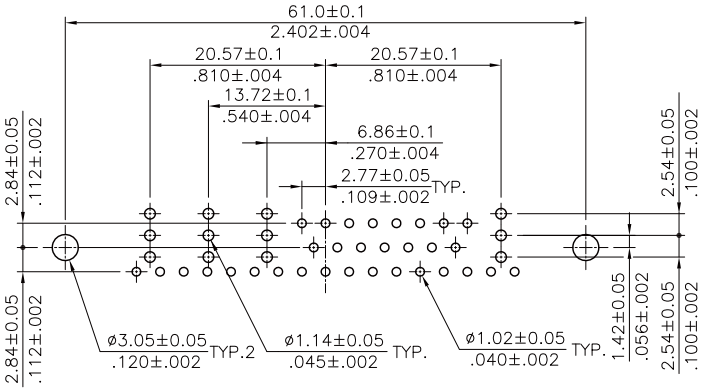

⚠1 Recommended P.C Board Layout

Materail:

Insulator: Glass filled Polyester UL 94V-0
Contact: Copper alloy
Shell: Steel, Tin plated as standard

Coaxial terminal
Insulator: Teflon UL 94V-0
Color white
Contact: Brass

Mounting Style			
Code BLANK	Code J	Code N	Code Z
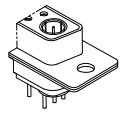	DIM. L= 4.0mm 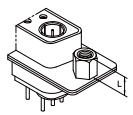	DIM. L= 4.0mm 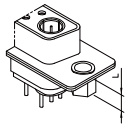	DIM. L= 7.0mm 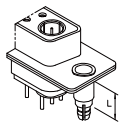

RoHS Compliant

MORETHANALL
PCB CONNECTORS
Cable ASSEMBLIES
煜倫股份有限公司
www.morethanall.com

DRAWING BY CY		TOLERANCES ARE
CHECKED BY GENIUS		X. ±
UNIT / mm	SCALE 1 : 1	.X ± 0.3
DATE		.XX ± 0.2
		.XXX ± 0.1
		ANG ±
SIZE A4	PPOJECTION	

照片框

ORDER INFORMATION

DXD-Pxxy-36W4-LF

SERIES
MALE
50:50 OHM
75:75 OHM
J.N.Z / TYPE
36W4
LEADFREE

DESCRIPTION: