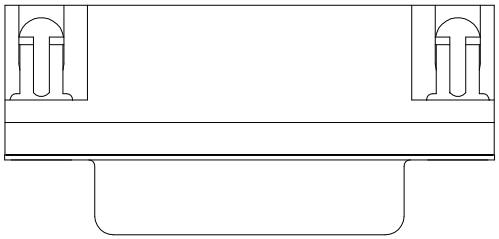

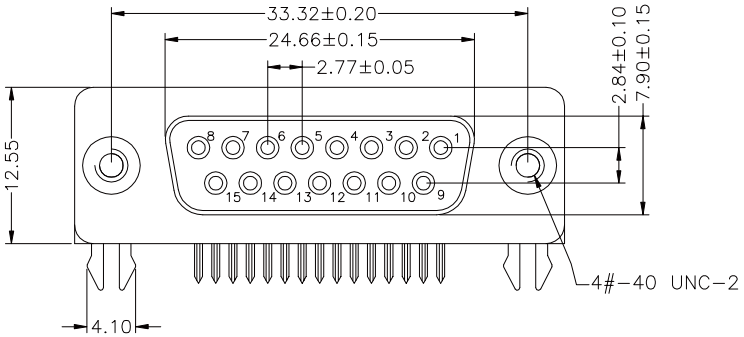

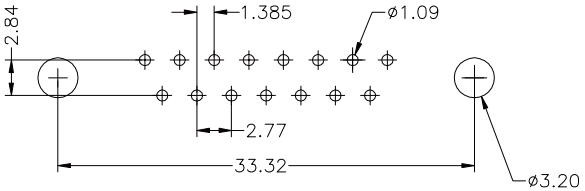

P.C.B. LAYOUT

NOTES:

1.MATERIAL

1.1 Insulator:PBT+30%Glass Fiber (UL94V-0)

1.2 Contact: Brass 0.2T Gold **Flash** Plated

1.3 Shell:Steel,Gold Plated

1.4 Screw:Brass Gold Plated

2.SPECIFICATION

2.1 Current Rate:5 Amps

2.2 Insulator Resistance:5000MΩ Min. at 500V DC

2.3 Dielectric Strength:1000V Per minute

2.4 Operation Temperature:-55℃ to+105℃

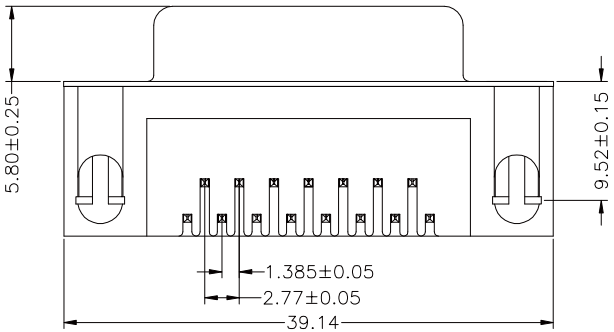

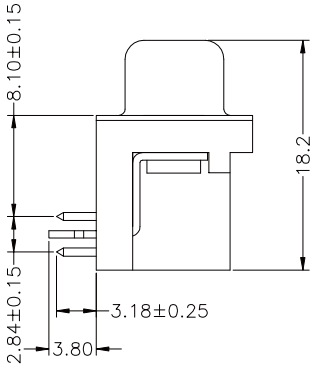

RoHS Compliant

MORETHANALL
PCB CONNECTORS
Cable ASSEMBLIES
煜倫股份有限公司
www.morethanall.com

DRAWING BY CY	
CHECKED BY GENIUS	
UNIT / mm	SCALE 1 : 1
DATE	
SIZE A4	PPOJECTION

TOLERANCES ARE
X. ±
.X ± 0.30
.XX ± 0.20
.XXX ± 0.10
ANG ±

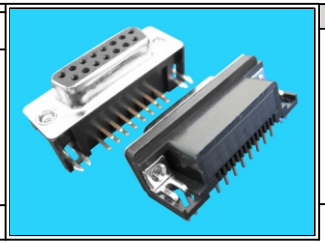

ORDER INFORMATION

DR-SGN-15-LF

SERIES
LEADFREE
15 WAY
NUT
FULL GOLD
FEMALE

DESCRIPTION: D-SUB RIGHT ANGLE P.B.C TYPE(F)