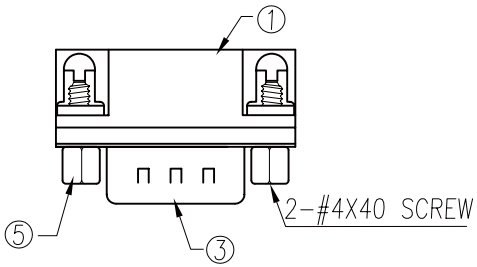

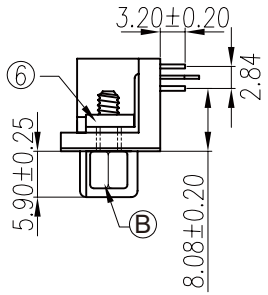

Note:

Specification:

1. Current rating: 1 A Max.
2. Dielectric withstanding voltage: 500 V(ac) for 1 minute.
3. Contact resistance: 30 mΩ Max.
4. Insulation resistance: 1000 MΩ Min at DC 500V.
5. Mating force: 5.5 Kgf Max.
6. Unmating force: 1.7 Kgf Min.
7. Temperature range: −55°C~+105°C

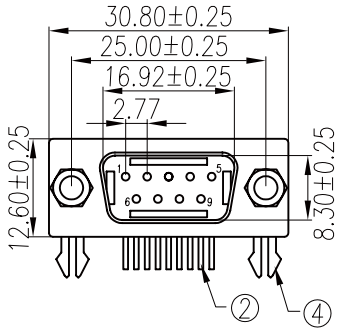

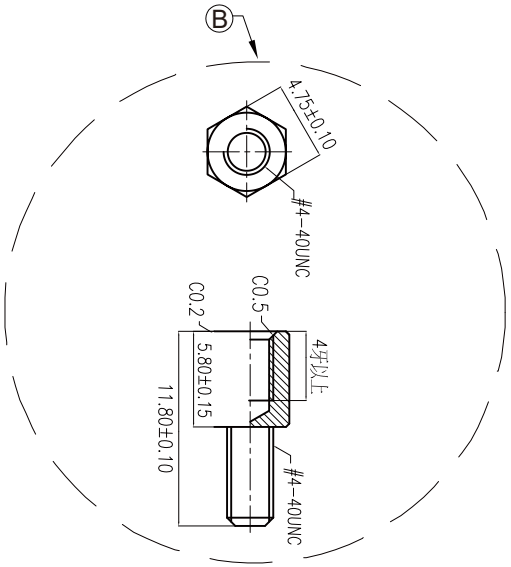

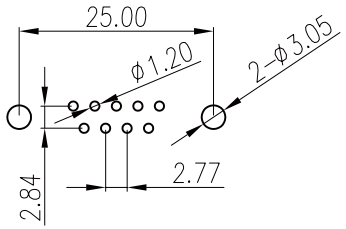

P.C.B. LAYOUT
****

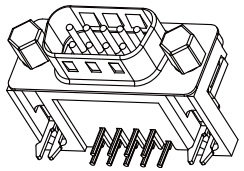

No.	Name	Q'ty	Material	Remarks & Thickness	Finish
6	Screw	2	Brass	4.75*11.80mm	80u"min. Nickel Plated
5	Rivated	2	Brass	5.4*5.1mm	80u"min. Nickel Plated
4	"Z"type board-lock	2	Brass	T=0.50mm	80u"min. Tin Plated
3	Front-shell	1	Cold rolled steel	T=0.40mm	80u"min. Nickel Plated
2	Contact	9	Brass	T=0.20mm	Contact area:0.8u"min. Gold Plated over 40u"Nickel min. Solder area:80u"min. Gold Plated over 40u"Nickel min. (All Gold)
1	Housing	2	P.B.T	UL 94-V0	Black

RoHS Compliant

MORETHANALL PCB CONNECTORS Cable ASSEMBLIES
煜倫股份有限公司
www.morethanall.com

DRAWING BY CY		TOLERANCES ARE
CHECKED BY GENIUS		X. ± .X ± 0.30 .XX ± 0.20 .XXX ± 0.10 ANG ± 1°
UNIT / mm	SCALE 1 : 1	
DATE		
SIZE A4	PPOJECTION	

照片框

ORDER INFORMATION

DR-PGNJ6-09-LF

SERIES
MALE
GOLD
NUT
JACKSCRW 6mm
09WAY
LEADFREE

DESCRIPTION: D-SUB RIGHT ANGLE P.C.B TYPE 9PIN(M)鉚鎖