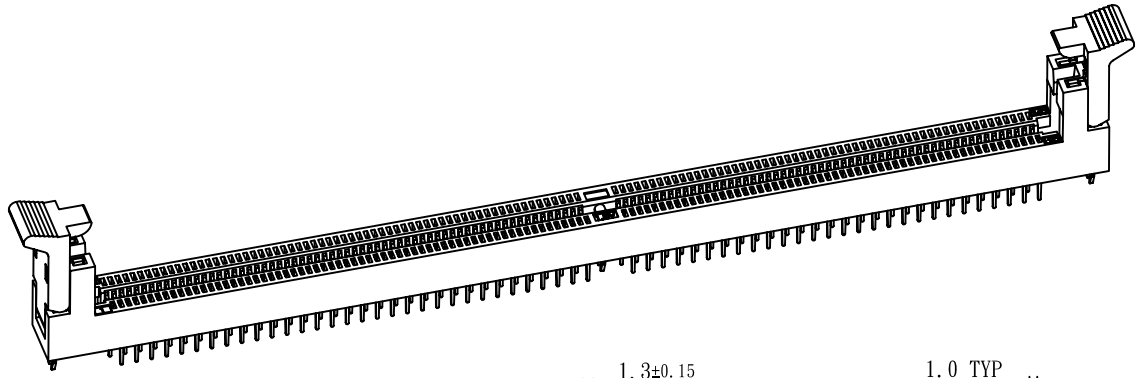

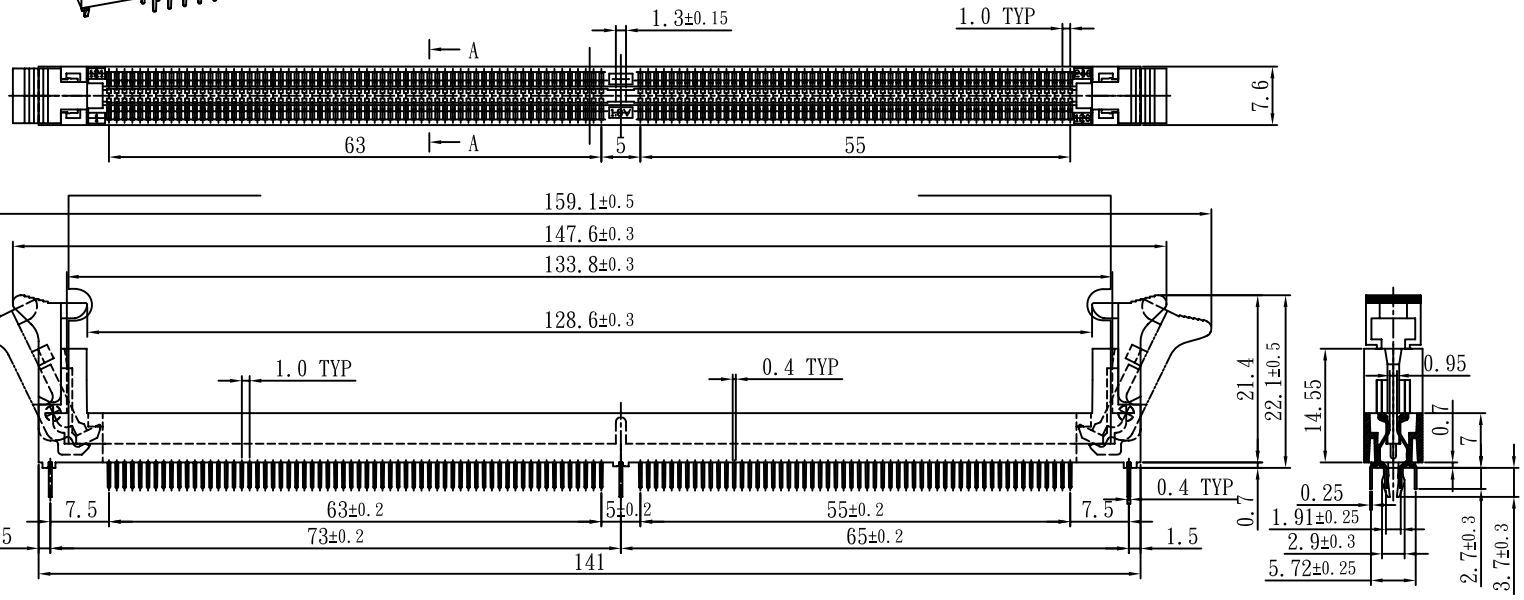

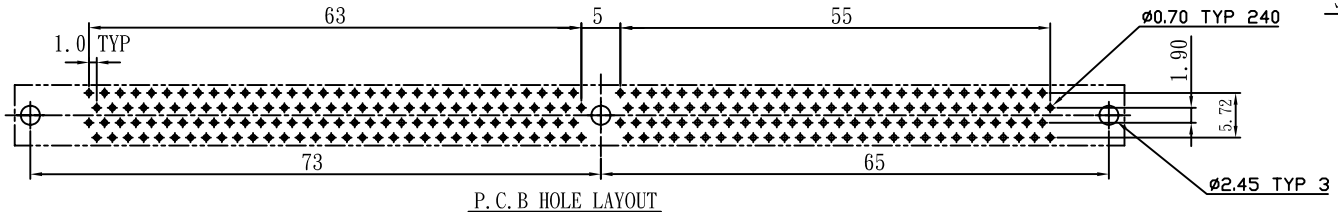

P.C.B HOLE LAYOUT

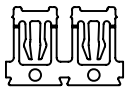

RoHS Compliant

MORETHANALL
PCB CONNECTORS
Cable ASSEMBLIES
煜倫股份有限公司
www.morethanall.com

DRAWING BY CY		TOLERANCES ARE
CHECKED BY GENIUS		X. ±
UNIT / mm	SCALE 1 : 1	.X ±
		.XX ±
DATE		.XXX ±
		ANG ±
SIZE A4	PPOJECTION	

照片框

ORDER INFORMATION

DIM1-DZSxx-240V18-LF

- SERIES
- DIP 180° / CLIP
- 240 WAY
- 1.8V
- S10:SEMI GOLD 10u" / S15:SEMI GOLD 15u" / S30:SEMI GOLD 30u"
- LEADFREE

DESCRIPTION: