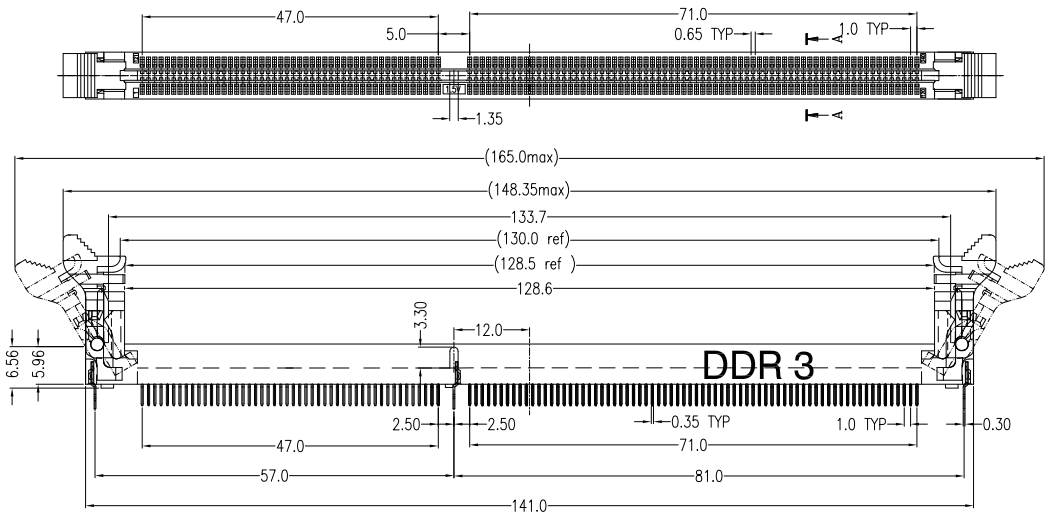

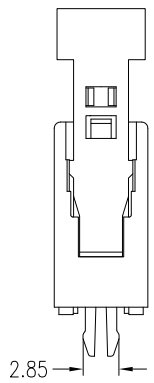

SCALE:2:1

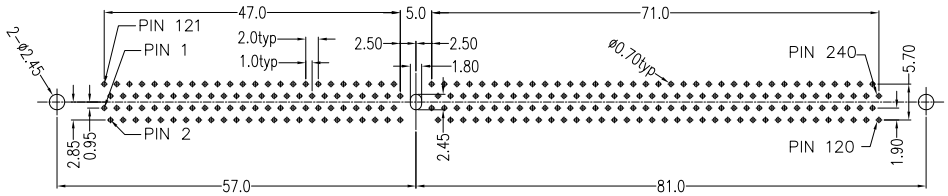

PCB LAYOUT

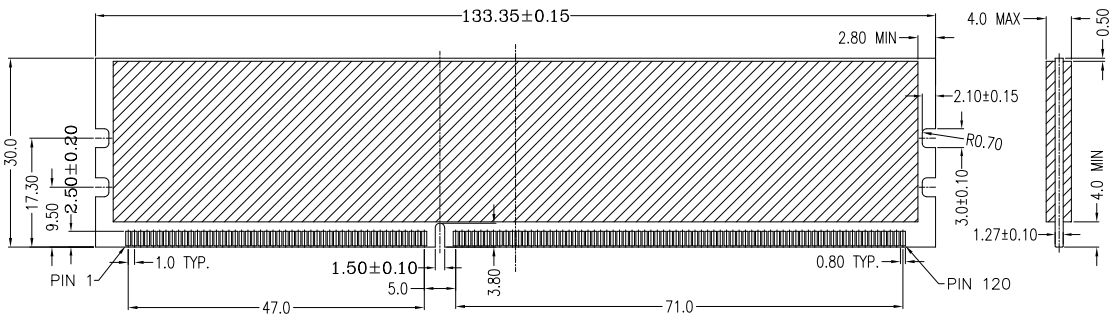

RECOMMENDED MODULE LAYOUT

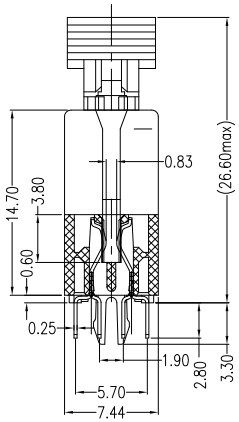

SECT:A-A

SCARE:2:1

NOTES

* MATERIAL:
  BODY: Nylon66+20%~30%G.F, UL 94V-0 RATED.
  EJECTOR: Nylon66+30%G.F,UL 94V-0 RATED.
  COLOR: Ivory
  CONTACT: Brass
  CONTACT PLATING: Gold Plating Over Nickel On Contact Area Tin Plating On Solder Tail
* MECHANICAL:
  RETENTION FORCE-TERMINAL: 300 Grams Min. Per
  INSERTION FORCE: 35 lb. Max.
  UNMATING FORCE: 14 Grams Min. Per Pin Pair
* ELECTRICAL SPECIFICATION
  CONTACT RESISTANCE: 30 Milliohms Max. Initial
  INSULATION RESISTANCE: 1000 Megohms Min. AT 500 VDC
  WITHSTAND VOLTAGE: 500 V AC,
* ENVIRONMENTAL:
  OPERATING TEMPERATURE: -55°C TO +105°C

RoHS Compliant

MORETHANALL PCB CONNECTORS Cable ASSEMBLIES
煜倫股份有限公司
www.morethanall.com

DRAWING BY CY		TOLERANCES ARE
CHECKED BY GENIUS		X. ±
UNIT / mm	SCALE 1 : 1	.X ±
		.XX ±
DATE		.XXX ±
		ANG ±
SIZE A4	PPOJECTION	

照片框

ORDER INFORMATION

DIM1-DZS15-240V15-LF

SERIES
CLIP
DIP 180°
SEMI GOLD 15u"
240 WAY
1.5V
LEADFREE

DESCRIPTION: DDR3-240P Shield Metal Posts CRT