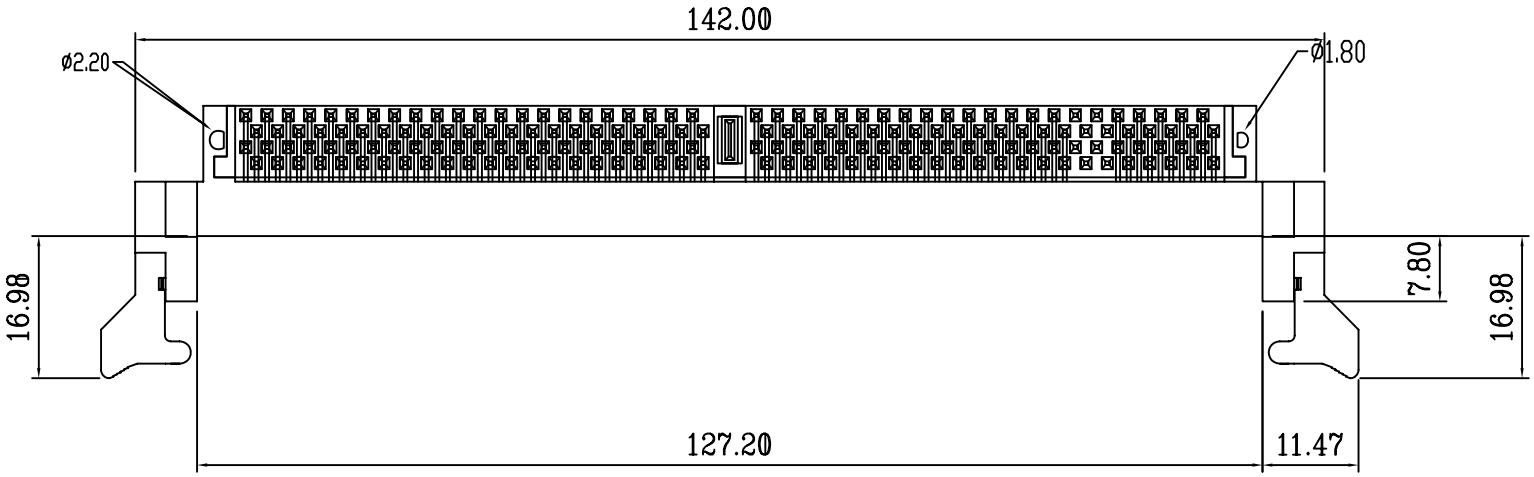

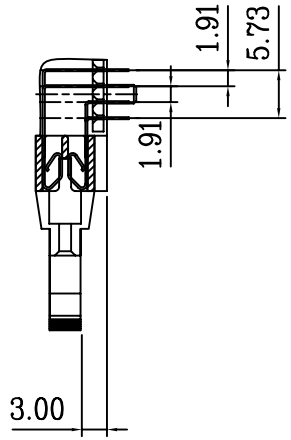

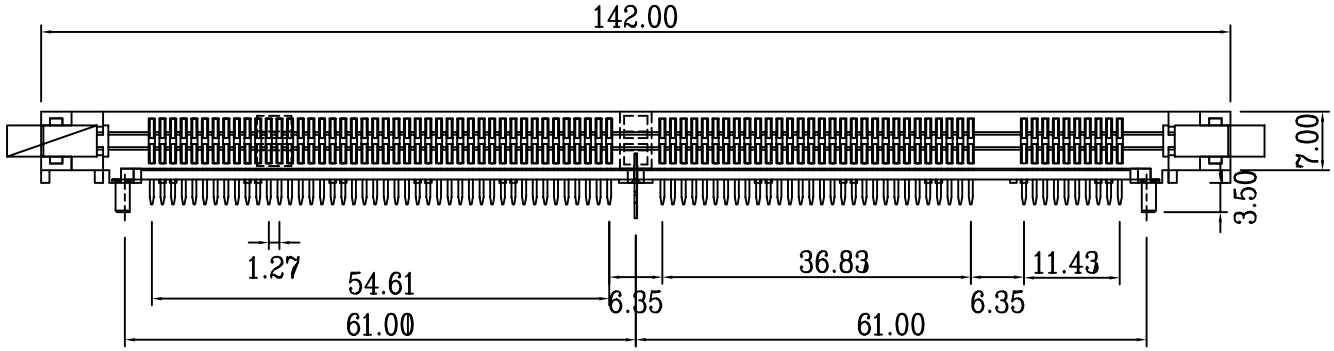

RoHS Compliant

MORETHANALL
PCB CONNECTORS
Cable ASSEMBLIES
煜倫股份有限公司
www.morethanall.com

DRAWING BY CY	
CHECKED BY GENIUS	
UNIT / mm	SCALE 1 : 1
DATE	
SIZE A4	PPOJECTION

TOLERANCES ARE
X. ±
.X ± 0.15
.XX ± 0.10
.XXX ± 0.05
ANG ±

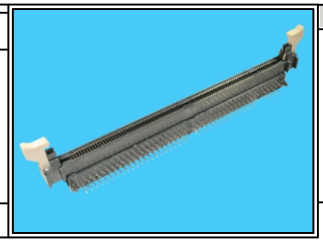

ORDER INFORMATION

DIM-R-168-LF

SERIES — DIP 90° — 168WAY — LEADFREE

DESCRIPTION: Dimm Socket 168P 90°