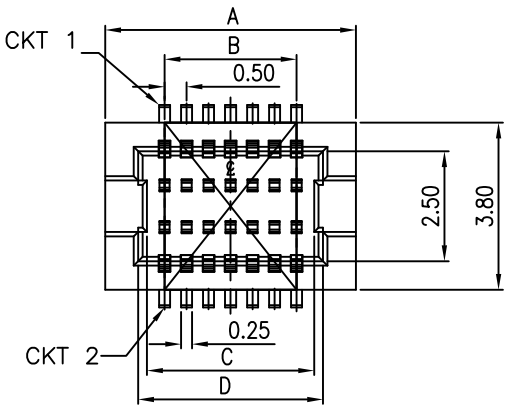

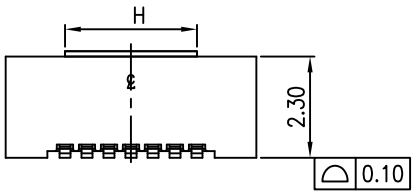

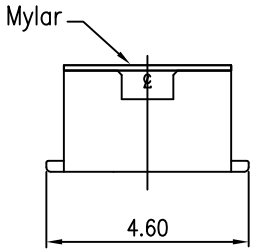

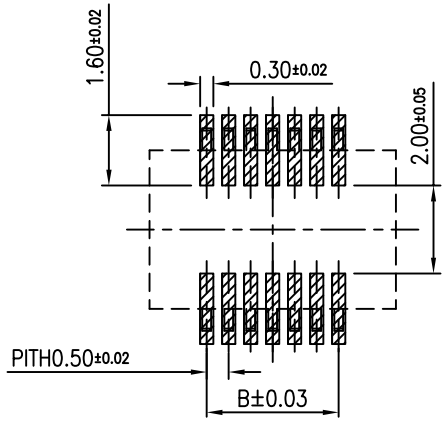

RECOMMENDED PCB LAYOUT
GENERAL TOLORANCE ±0.05
WITHOUT BOSS WITHOUT FITTING NAIL

NOTES:
1. MATERIAL:
   1.1 HOUSING: THERMOPLASTIC, HIGH TEMP., UL94V-0;COLOR IS NATURAL.
   1.2 CONTACT: COPPER ALLOY
2. FINISH:
   2.1 CONTACT:
   GOLD FLASH OVER ALL
   50u" MIN. NICKEL UNDERPLATING OVERALL.
3. IR REFLOW CAPABLE TO 260°C

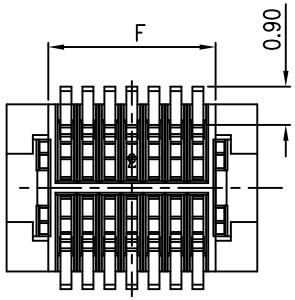

CKT	DIM A	DIM B	DIM C	DIM D	DIM E	DIM F	MYLAR-A H	MYLAR-B H
010	4.7	2.00	2.80	3.20		2.8	3.0	3.0
014	5.7	3.00	3.80	4.20		3.8	3.0	3.0
020	7.2	4.50	5.30	5.70		5.3	5.0	5.0
024	8.2	5.50	6.30	6.70		6.3	5.0	5.0
030	9.7	7.00	7.80	8.20		7.8	6.0	6.0
032	10.2	7.50	8.30	8.70		8.3	6.0	6.0
036	11.2	8.50	9.30	9.70		9.3	6.0	6.0
040	12.2	9.50	10.30	10.70		10.3	6.0	6.0
050	14.7	12.00	12.80	13.20		12.8	6.0	6.0
060	17.2	14.50	15.30	15.70		15.3	6.0	6.0
080	22.2	19.50	20.30	20.70		20.3	6.0	6.0

RoHS Compliant

MORETHANALL PCB CONNECTORS Cable ASSEMBLIES
煜倫股份有限公司
www.morethanall.com

DRAWING BY CY	
CHECKED BY GENIUS	
UNIT / mm	SCALE 1 : 1
DATE	
SIZE A4	PPOJECTION

TOLERANCES ARE
X. ± 0.50
.X ± 0.25
.XX ± 0.15
.XXX ± 0.10
ANG ± 2°

照片框

ORDER INFORMATION

DF12-P23XCR-xxx-LF
- SERIES
- MALE
- NON POST
- UNMATED HIGH 2.30mm
- MYLAR
- REEL
- 010~080 WAY
- LEADFREE

DESCRIPTION: 0.5mm B-T-B CONNECTOR PLUG D/R S/T SMT TYPE

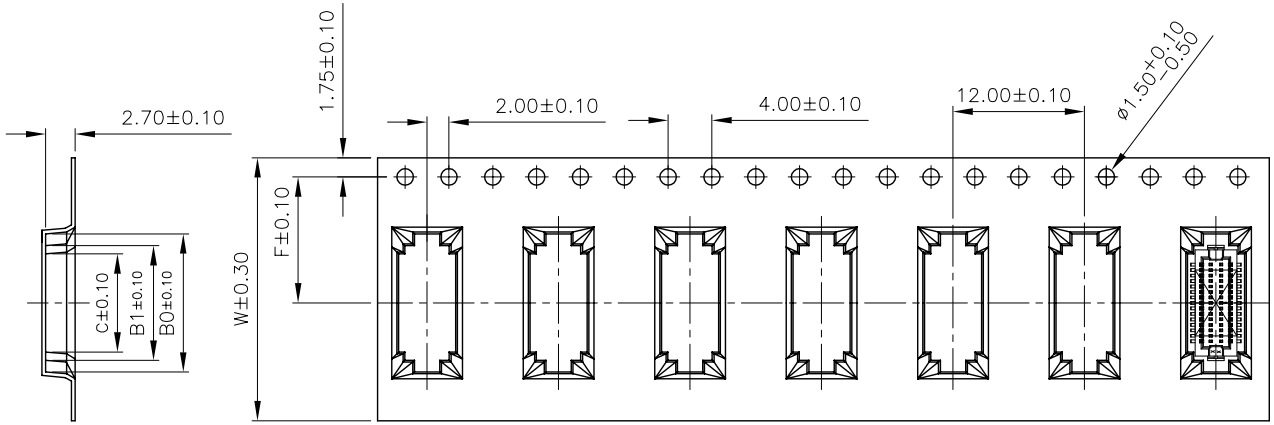

CKT	W	F	C	B1	B0	D
32	24.00	11.50	8.95	10.45	12.60	24.40
30	24.00	11.50	8.45	9.95	12.10	24.40
10	16.00	5.50	3.15	4.95	7.10	16.40

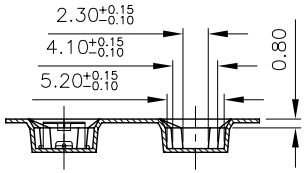

NOTES:
1. 10 SPROCKET HOLE PITCH CUMULATIVE TOLERANCE.±0.20mm
2. CARRIER CAMBER NOT TO EXCEED 1mm IN 250mm.
3. ALL DIMENSIONS MEET EIA-481 REQUIREMENTS.
4. MATERIAL: BLACK ANTI-STATIC POLYSTYRENE.
5. THICKNESS: 0.35 ± 0.05 mm.
6. COMPONENT LOAD PER 13" REEL : 1500 PCS.

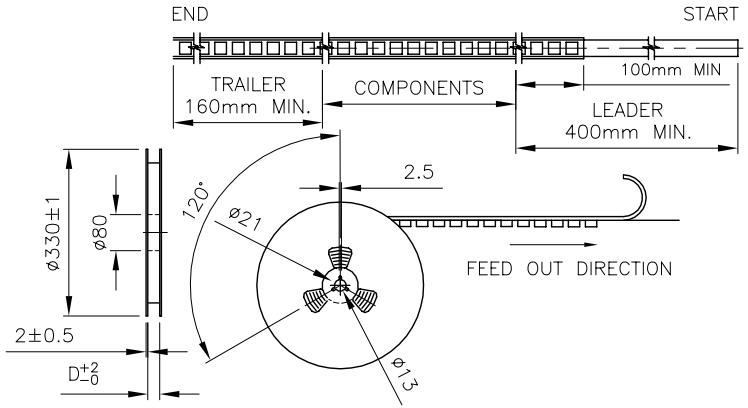

RoHS Compliant

MORETHANALL
PCB CONNECTORS
Cable ASSEMBLIES
煜倫股份有限公司
www.morethanall.com

DRAWING BY CY	
CHECKED BY GENIUS	
UNIT / mm	SCALE 1 : 1
DATE	
SIZE A4	PPOJECTION

TOLERANCES ARE
X. ± 0.50
.X ± 0.25
.XX ± 0.15
.XXX ± 0.10
ANG ± 2°

照片框

ORDER INFORMATION

DF12-P23XCR-xxx-LF

- SERIES
- MALE
- NON POST
- UNMATED HIGH 2.30mm
- MYLAR
- REEL
- 010~080 WAY
- LEADFREE

DESCRIPTION: 0.5mm B-T-B CONNECTOR PLUG D/R S/T SMT TYPE

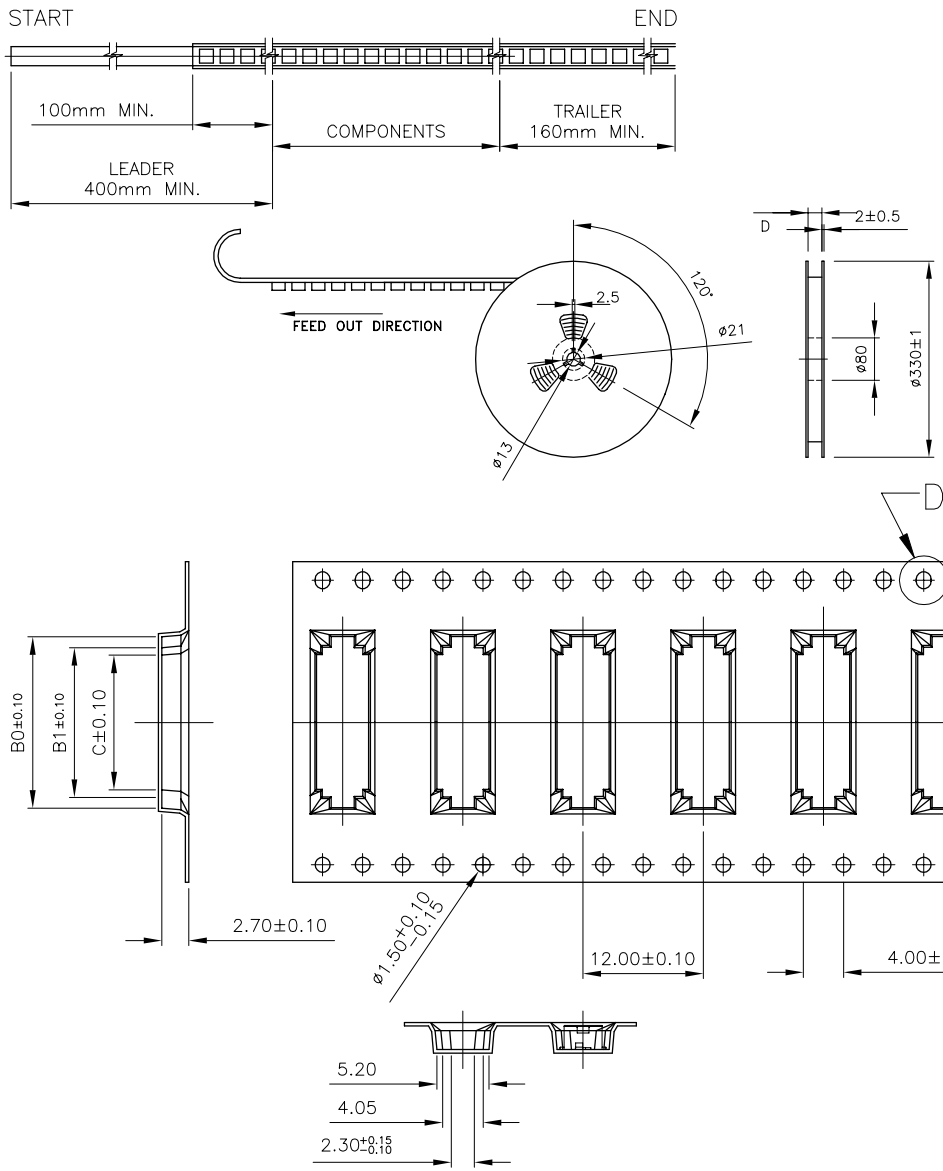

CKT	W	F	C	B1	B0	D
50	32.00	14.20	13.45	14.95	17.10	32.40
60	32.00	14.20	15.90	17.45	19.60	32.40

NOTES:
1. 10 SPROCKET HOLE PITCH CUMULATIVE TOLERANCE.±0.20mm
2. CARRIER CAMBER NOT TO EXCEED 1mm IN 250mm.
3. ALL DIMENSIONS MEET EIA-481 REQUIREMENTS.
4. MATERIAL: BLACK ANTI-STATIC POLYSTYRENE.
5. THICKNESS: 0.35 ± 0.05 mm.
6. COMPONENT LOAD PER 13" REEL : 1500 PCS.
7. 成品擺放方向應同向.

RoHS Compliant

MORETHANALL PCB CONNECTORS Cable ASSEMBLIES
煜倫股份有限公司
www.morethanall.com

DRAWING BY CY	
CHECKED BY GENIUS	
UNIT / mm	SCALE 1 : 1
DATE	
SIZE A4	PPOJECTION

TOLERANCES ARE
X. ± 0.50
.X ± 0.25
.XX ± 0.15
.XXX ± 0.10
ANG ± 2°

照片框

ORDER INFORMATION

DF12-P23XCR-xxx-LF

- SERIES
- MALE
- UNMATED HIGH 2.30mm
- NON POST
- MYLAR
- REEL
- 010~080 WAY
- LEADFREE

DESCRIPTION: 0.5mm B-T-B CONNECTOR PLUG D/R S/T SMT TYPE