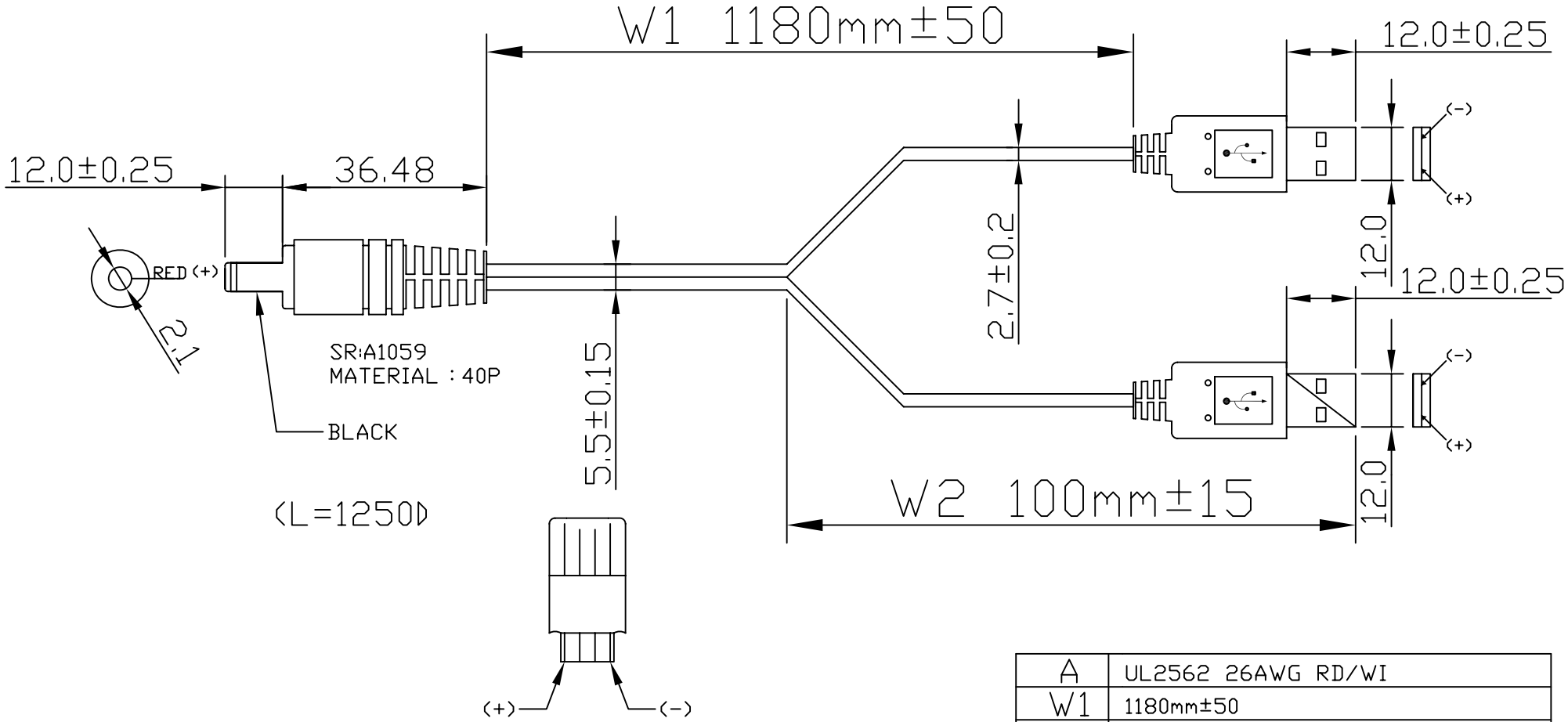

A	UL2562 26AWG RD/WI
W1	1180mm±50
W2	100mm±15

RoHS Compliant

MORETHANALL
PCB CONNECTORS
Cable ASSEMBLIES
煜倫股份有限公司
www.morethanall.com

DRAWING BY CY	
CHECKED BY GENIUS	
UNIT / mm	SCALE 1 : 1
DATE	
SIZE A4	PPOJECTION

TOLERANCES ARE
X. ±
.X ±
.XX ±
.XXX ±
ANG ±

照片框

ORDER INFORMATION

DCUBX12-214A26-M1M25-LF

SERIES
2.1Ø TO 4 PIN A TYPE
26 AWG
MALE TO MALE
1250mm
LEADFREE

DESCRIPTION: