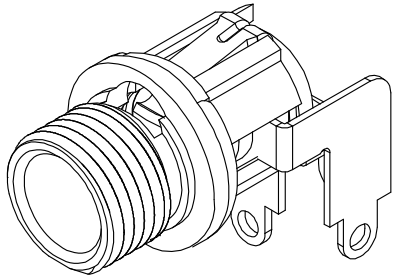

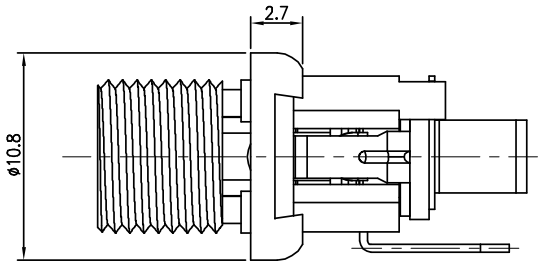

CAT NO.	PIN	SCHEMATIC
DCJ-RPBT8NW-20	ø2.0	1 3 2
DCJ-RPBT8NW-25	ø2.5	

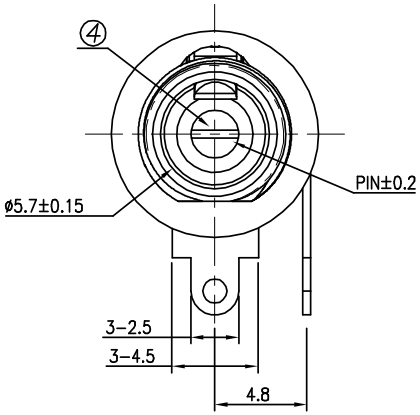

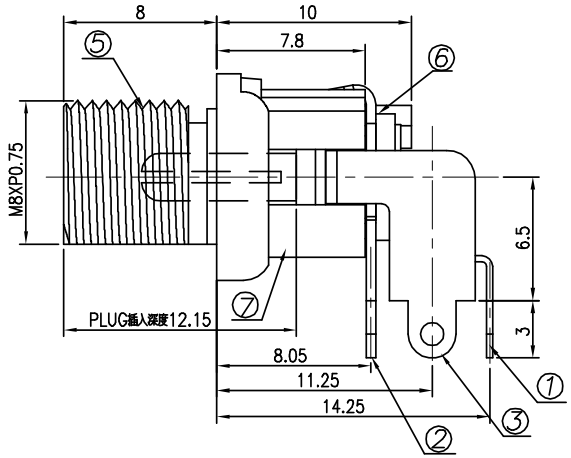

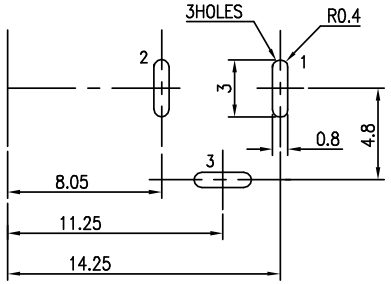

T:1.6 Dimensions of PC board holes

Tolerance : ±0.05(Printed-Top view)

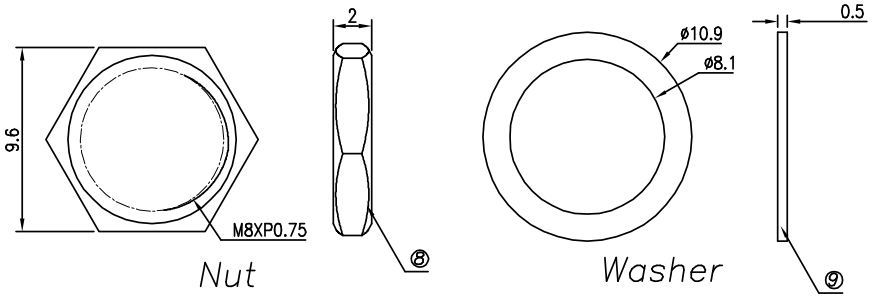

UNLESS OTHERWISE SPECIFIED, TOLERANCE ON DECIMAL: ±0.3

LTR	PART NAME	QTY	MATERIAL	REMARK
9	WASHER	1	SPCC	Cu/Sn PLATED
8	NUT	1	H59(COPPER ALLOY)	Cu/Sn PLATED
7	HOUSING	1	PBT 4815	UL-94V0(BLACK)
6	INSULATOR	2	PF	
5	AXIS SUPPORT	1	H59(COPPER ALLOY)	Cu/Sn PLATED
4	PIN	1	H59(COPPER ALLOY)	Cu/Sn PLATED
3	SHUNT TERMIANL	1	C2680	Sn PLATED
2	TIP SPRING	1	C5191	Sn PLATED
1	CENTER PIN TERMINAL	1	C2680	Sn PLATED

RoHS Compliant

MORETHANALL PCB CONNECTORS Cable ASSEMBLIES

煜倫股份有限公司

www.morethanall.com

DRAWING BY CY		TOLERANCES ARE
CHECKED BY GENIUS		X. ±
UNIT / mm	SCALE 1 : 1	.X ±
		.XX ±
DATE		.XXX ±
		ANG ±
SIZE A4	PPOJECTION	

照片框

ORDER INFORMATION

DCJ-RPBT8NW-xx-LF

SERIES
DIP 90°
PANEL
BACK
NUT
THREAD 8.0mm
WASHER
20:2.0Ø
25:2.5Ø
LEADFREE

DESCRIPTION: DC POWER JACK