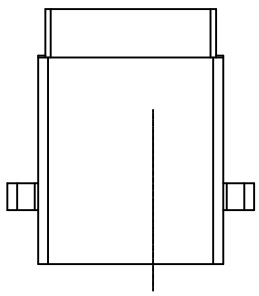

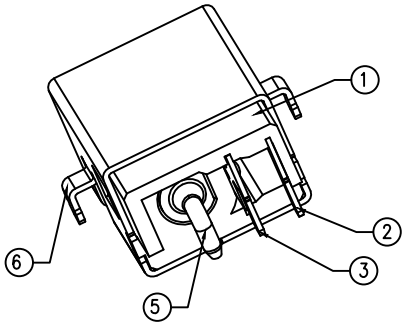

SPECIFICATIONS:

1. ELECTRICAL CHARACTERISTICS:
   1-1. RATING: 24V 5A
   1-2. CONTACT RESISTANCE: 30mΩ MAX.(INITIAL)
   1-3. DIELECTRIC WITHSTANDING VOLTAGE: 500V AC FOR ONE MINUTE
   1-4. INSULATION RESISTANCE: 100MΩ MIN. MEASURED BY 500V DC
2. MECHANICAL CHARACTERISTICS:
   2-1. INSERTION FORCE : 0.3~3.0 KGF
   2-2. WITHDRAWAL FORCE : 0.3~3.0 KGF
3. LIFE TEST: 5,000 CYCLES MIN.
4. FOR REFLOW SOLDERING LEAD-FREE PROCESS.

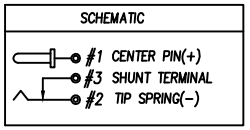

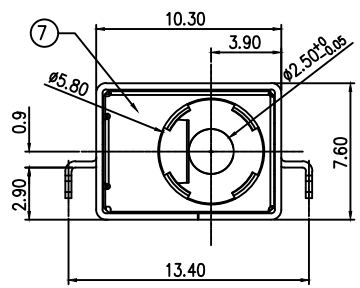

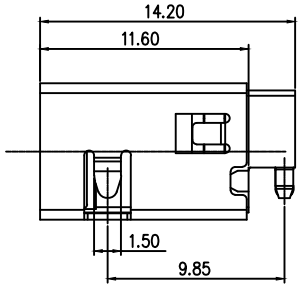

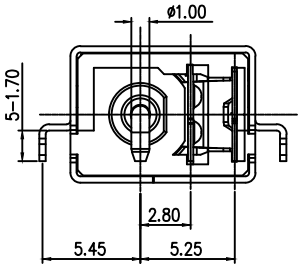

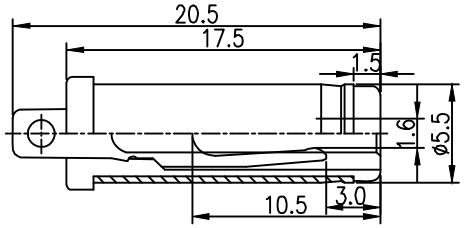

MATING PLUG ø5.50

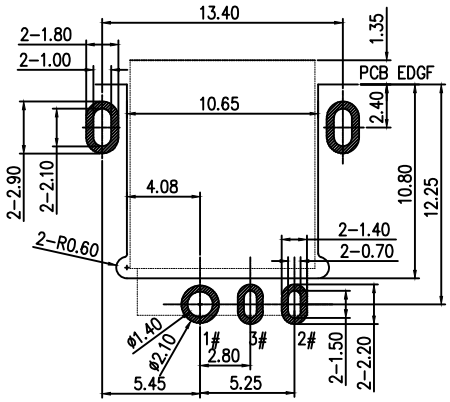

RECOMMEND P.C.B LAYOUT
TOP VIEW (TOLERANCES: 0.05)

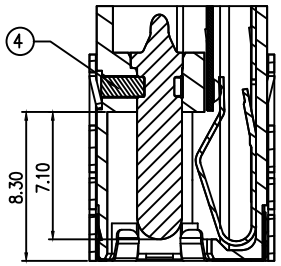

LTR	PART NAME	QTY	MATERIAL	REMARK
7	GROUNDING	1	SUS t=0.10	N/A
6	SHIELDING	1	BRAS t=0.35	Ni(60u") PLATED
5	PIN	1	BRASS BAR	Ni(50u") PLATED
4	STOPPER	1	SUS t=0.30	CLEANING
3	SHUNT TERMINAL	1	BRASS STRIP t=0.30	Ag(20u") OVER Ni(20U")
2	TIP SPRING	1	COPPER ALLOY t=0.25	Ag(20u") OVER Ni(20U")
1	HOUSING	1	HIGH TEMP.THFRMOPLASTIC	UL94V-0(BLACK)

UNLESS OTHERWISE SPECIFIED, TOLERANCE ON DECIMAL: ±0.3

RoHS Compliant

MORETHANALL PCB CONNECTORS Cable ASSEMBLIES
煜倫股份有限公司
www.morethanall.com

DRAWING BY CY		TOLERANCES ARE
CHECKED BY GENIUS		X. ±
UNIT / mm	SCALE 1 : 1	.X ±
		.XX ±
DATE		.XXX ±
		ANG ±
SIZE A4	PPOJECTION	

照片框

ORDER INFORMATION

DCJ-RFM-25-LF

SERIES
DIP 90°
OFFSET
METAL
2.5Ø
LEADFREE

DESCRIPTION: DC JACK