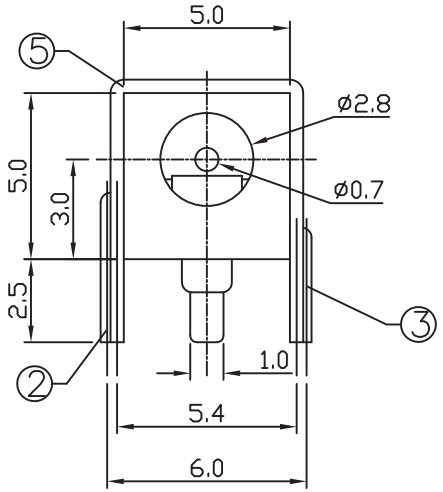

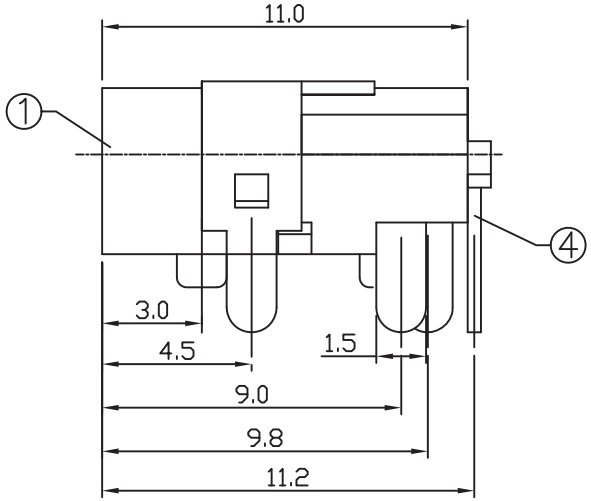

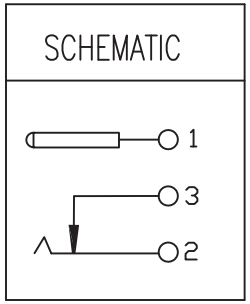

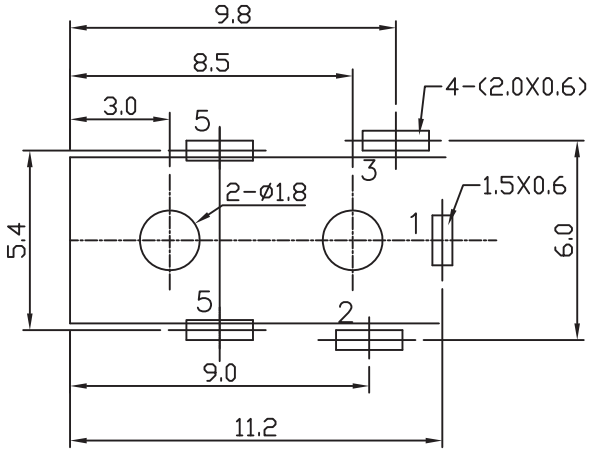

T:1.6 Dimensions of PC board holes

Tolerance : ±0.1(Printed-top view)

UNLESS OTHERWISE SPECIFIED, TOLERANCE ON DECIMAL: ±0.3

LTR	PART NAME	QTY	MATERIAL	REMARK
5	CONTACT FOOT	1	BRASS	MB:Cu Ag PLATED
4	SHUNT	1	BRASS	MB:Cu Ag PLATED
3	SPRING	1	Y-CUT/65Mn STEEL	MB:Cu Ag PLATED
2	PLAT PIECE	1	H62y BRASS	MB:Cu Ag PLATED
1	HOUSING	1	PBT	

RoHS Compliant

MORETHANALL PCB CONNECTORS Cable ASSEMBLIES

煜倫股份有限公司

www.morethanall.com

DRAWING BY CY		TOLERANCES ARE
CHECKED BY GENIUS		X. ±
UNIT / mm	SCALE 1 : 1	.X ±
		.XX ±
DATE		.XXX ±
		ANG ±
SIZE A4	PPOJECTION	

照片框

ORDER INFORMATION

DCJ-R35M-065-LF

SERIES — DIP 90° — POST 3.0+5.5mm — METAL — 0.65Ø — LEADFREE

DESCRIPTION: DC POWER JACK