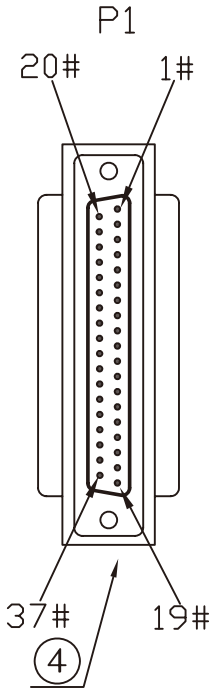

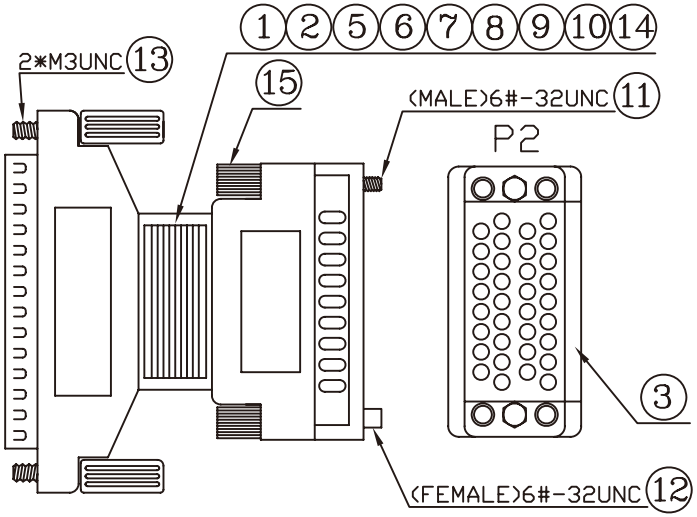

C<1>	A<9>	D<18>	B<26>
H<2>	E<10>	J<19>	F<27>
M<3>	K<11>	N<20>	L<28>
S<4>	P<12>	T<21>	R<29>
W<5>	U<13>	X<22>	V<30>
AA<6>	Y<14>	BB<23>	Z<31>
EE<7>	CC<15>	FF<24>	DD<32>
KK<8>	HH<16>	LL<25>	JJ<33>
	MM<17>		NN<34>

PIN ASSIGNMENT

P1	P2
6	R
24	T
8	V
26	X
5	Y
23	AA
3	DD
21	HH
13	F
11	E
9	D
18	NN
4	P
22	S
7	C
12	H
14	N
10	L
19, 25, 28, 30, 37	B
SHELL	SHELL

NO	DESCRIPTION	QTY	UNIT
15	PVC-GY22/30	2.8	G
14	FRAME METAL:(一件式,鍍鎳)	1	PCS
13	SRW-I4.0*22.0(M3.0UNC)	2	PCS
12	V.35-F-5.0*24MM(6#-32)	1	PCS
11	V.35-M-5.0*24MM(6#-32)	1	PCS
10	PVC-GY22/50	27	G
9	PE-5321	10	G
8	KEY PVC IN/GY22	2.5	G
7	FOIL-CU-27MM	110*1	MM
6	FOIL-CU-20MM	125*1	MM
5	HT-TEAMP TEAMP:W:20MM	100*1	MM
4	CDS-37P<BK>	1	PCS
3	V.35-S-HOUSING<六角螺絲孔>(BLACK)	1	PCS
2	TERMINAL:V.35-S(3U")	32	PCS
1	JUMP WIRE-24#-1061	60.0*19	MM

RoHS Compliant

MORETHANALL PCB CONNECTORS Cable ASSEMBLIES
煜倫股份有限公司
www.morethanall.com

DRAWING BY CY		TOLERANCES ARE
CHECKED BY GENIUS		X. ±
UNIT / mm	SCALE 1 : 1	.X ±
		.XX ±
DATE		.XXX ±
		ANG ±
SIZE A4	PPOJECTION	

照片框

ORDER INFORMATION

DBV35-EM-3734-LF

SERIES
MOLDING
MALE TO FEMALE
37 TO 34 WAY
LEADFREE

DESCRIPTION: DB37P / V.35S ADAPTER (V.35 F. - D-sub 37 M.)