Pin Type	DIM.L	Pin Type	REV	MODIFICATION	DATE	DRAW
Detect	3.5 mm	25,26	C	EN-07-1008	2007/10/04	SAN
General	4.25 mm	All OtherPins	D	EN-07-1143	2007/11/19	TONY
Power	5.0 mm	1,13,38,50	E	EN-10-0210	2010/02/09	TONY

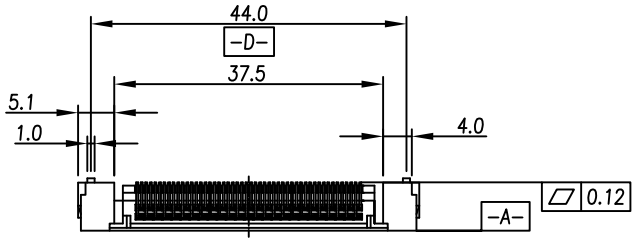

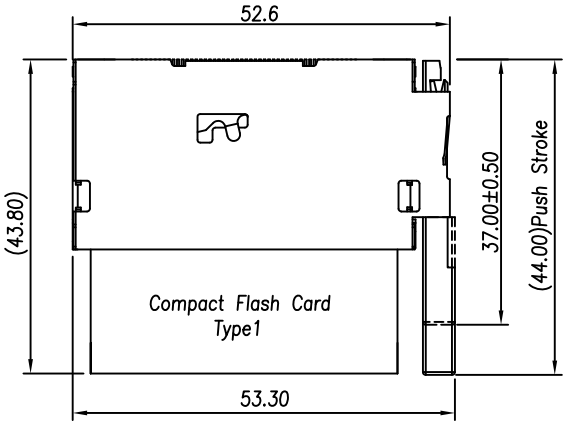

Header With Ejector

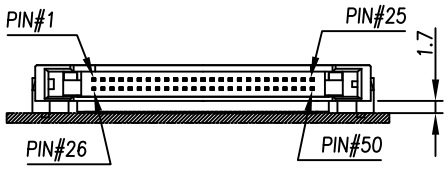

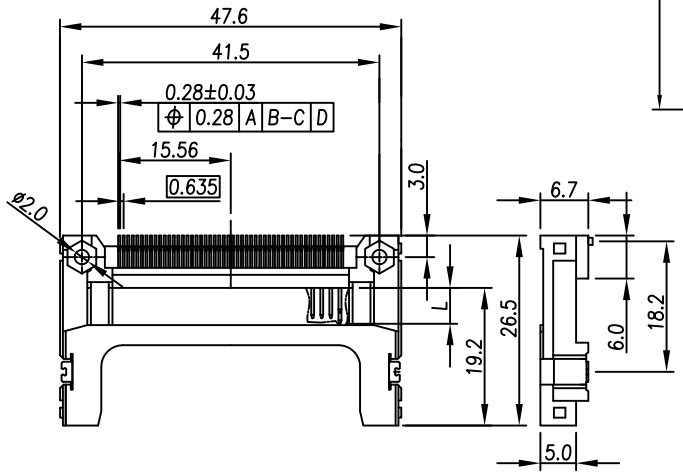

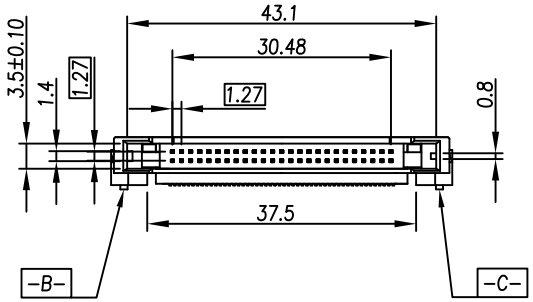

SPECIFICATIONS:
HOUSING : High Temperature Plastic, UL 94V-0
CONTACT : Copper Alloys
VOLTAGE RATING : 100VAC
CURRENT RATING : 0.5A
CONTACT RESISTANCE:40 m Ohm max.
INSULATION RESISTANCE:1000M Ohm min.
DIELECTRIC STRENGTH : 500VAC/1min
OPERATION TEMPERATURE : -40°C~85°C

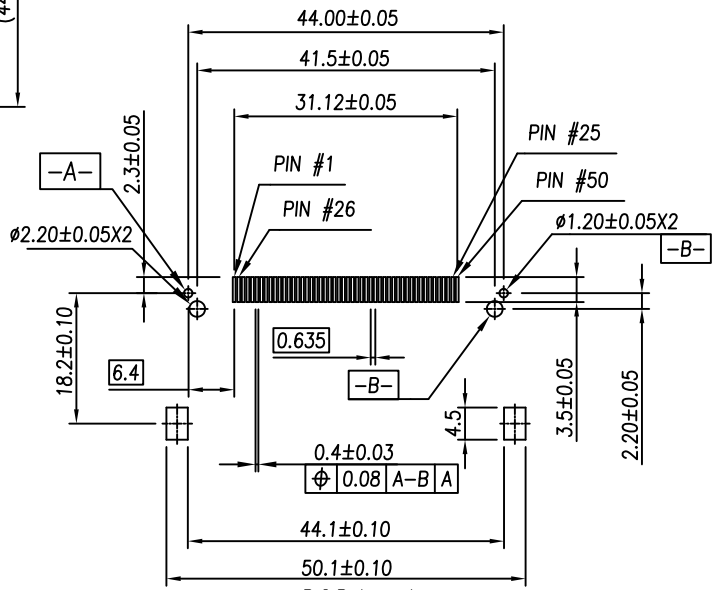

P.C.B Layout

RoHS Compliant

MORETHANALL PCB CONNECTORS Cable ASSEMBLIES
煜倫股份有限公司
www.morethanall.com

DRAWING BY CY		TOLERANCES ARE
CHECKED BY GENIUS		X. ±
UNIT / mm	SCALE 1 : 1	.X ±
		.XX ±
DATE		.XXX ±
		ANG ±
SIZE A4	PPOJECTION	

照片框

ORDER INFORMATION

CFC-PW40BE111RS-50-LF

SERIES
MALE
90°SMT
POST TO POST 40.16mm
B TYPE
EAR TYPE 1
STANDOFF 1.7mm
NORMAL
RIGHT EJECTOR
ST
50WAY
LEADFREE

DESCRIPTION: 1.27mm CF CARD CONN. 50PIN TYPE1 NORMAL TYPE