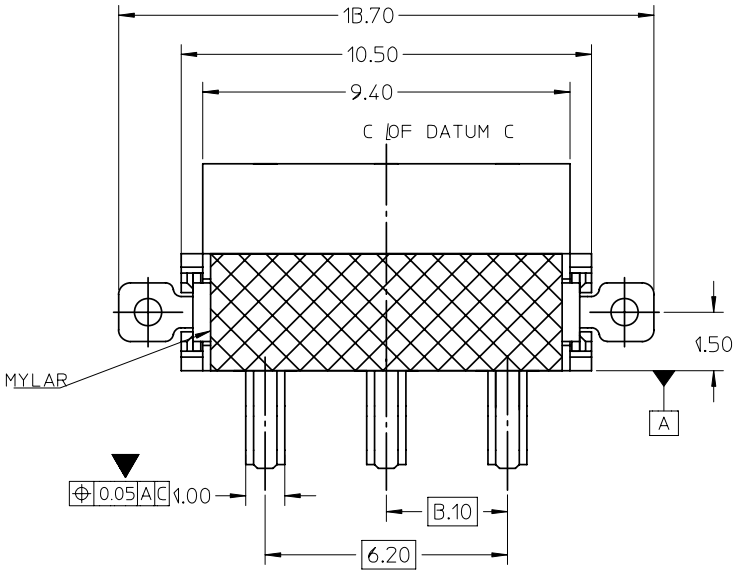

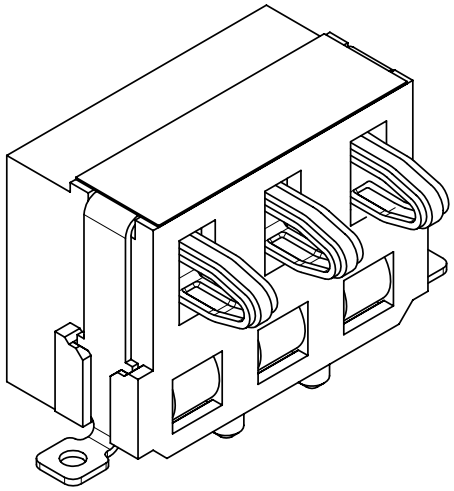

NOTES:

1. MATERIAL: REFER TO TABLE.
2. PLATING: REFER TO TABLE.
3. PRODUCT SPECIFICATION: N/A
4. PACKING SPECIFICATION: D-PA0407003
5. ENVIRONMENTAL:
   OPERATION TEMPERATURE: -40□J~+85□J
6. PRODUCT COMPLIANT TO THE REQUEST OF ROHS.

NO.		QTY.	MATERIAL	FINISH	REMARKS
4		1	POLYLMIDE FILM	YELLOW TRANSPARENCY 9.0*3.0	T=0.06MM
3		1	C7521	NO PLATED	T=0.20MM
2		3	C1720	GOLD FLASH OVER 1.27~3.81 MICRONS NICKEL OVER ALL GOLD PLATED 0.762 MICRONS ON THE CONTACT AREA	T=0.20MM
1		1	LCP	—	UL94V-0,BLACK

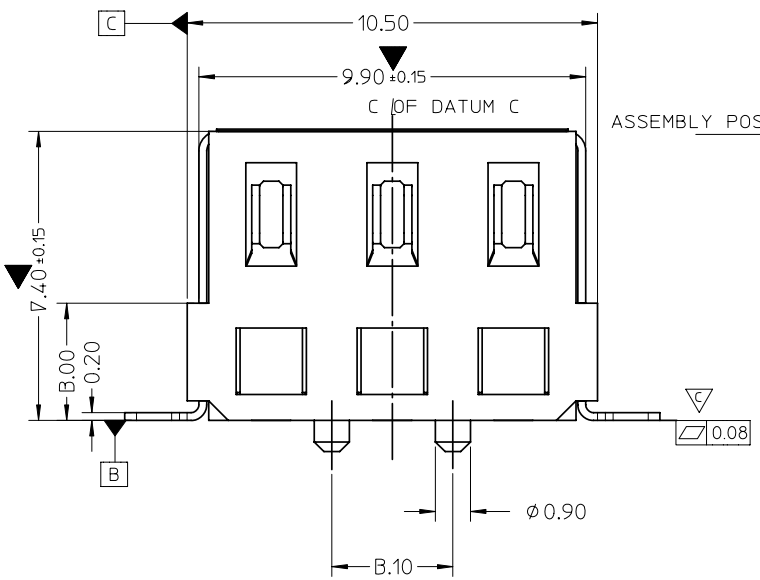

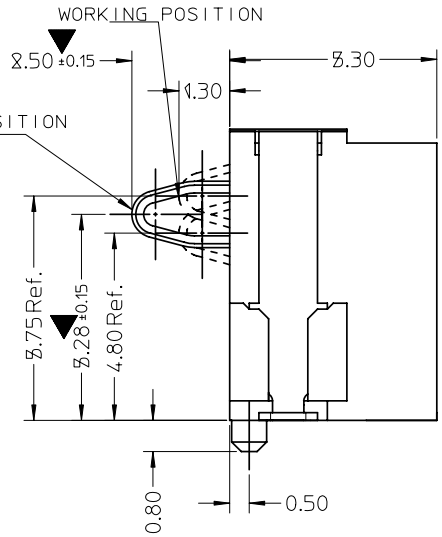

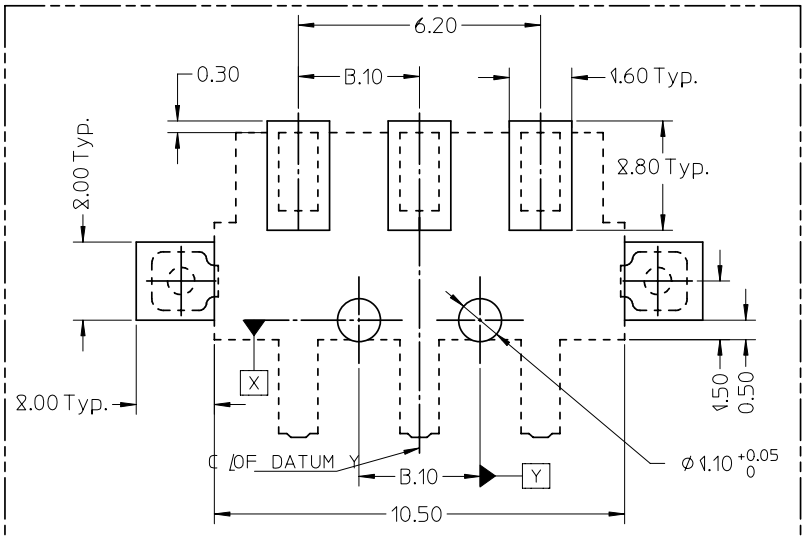

RECOMMENDED PCB.LAYOUT
UNSPECIFIED TOLERANCE : ± 0.10MM

RoHS Compliant

MORETHANALL PCB CONNECTORS Cable ASSEMBLIES
煜倫股份有限公司
www.morethanall.com

DRAWING BY CY	
CHECKED BY GENIUS	
UNIT / mm	SCALE 1 : 1
DATE	
SIZE A4	PPOJECTION

TOLERANCES ARE
X. ±
.X ± 0.20
.XX ± 0.10
.XXX ± 0.05
ANG ± 1.5°

照片框

ORDER INFORMATION

BCS31-W74EP2-03-LF

- SERIES
- 90°SMT
- HIGH 7.4mm
- EAR+POST
- 03 WAY
- LEADFREE

DESCRIPTION: 3PINS BATTERY CONNECTOR