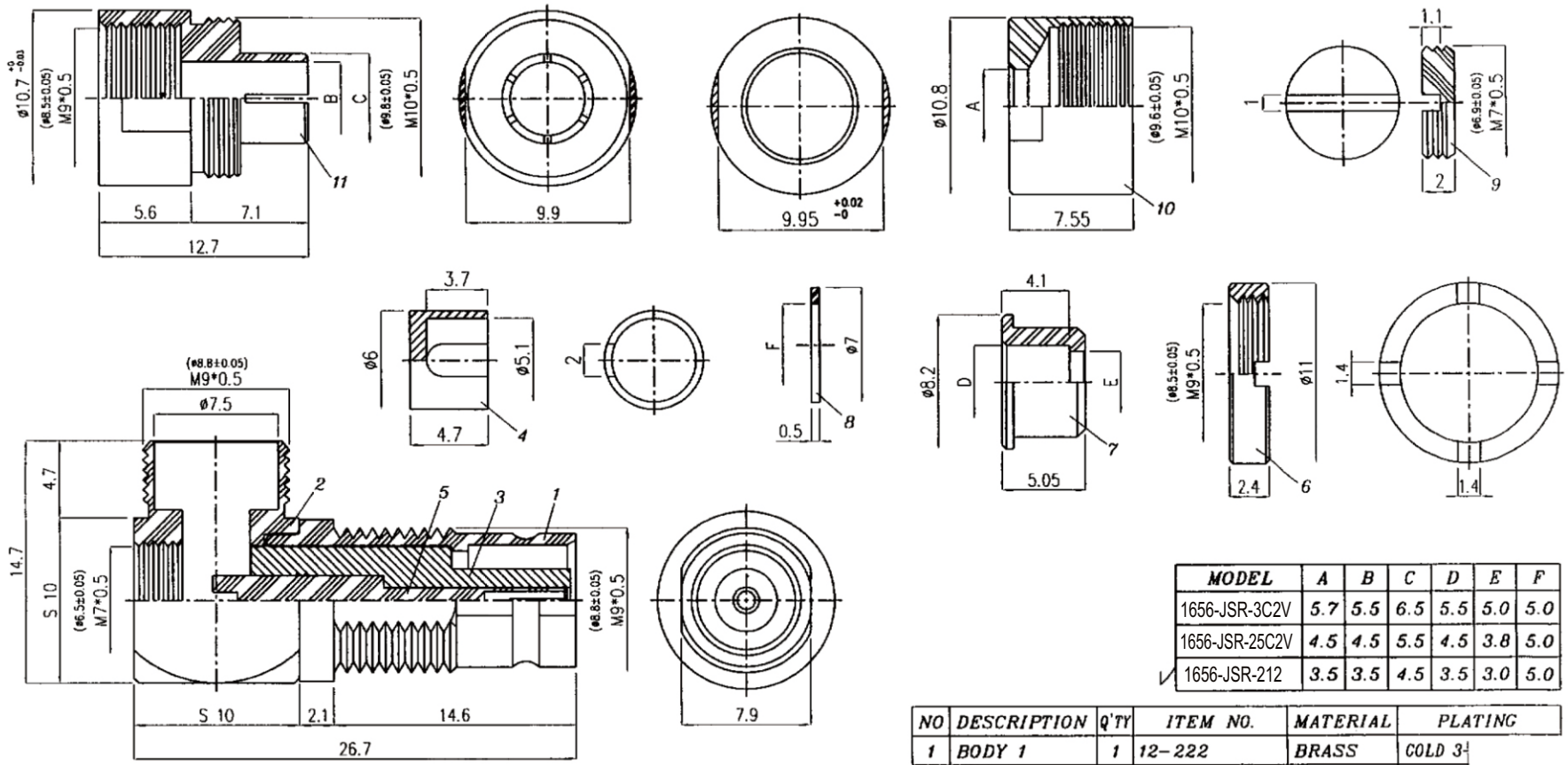

MODEL	A	B	C	D	E	F
1656-JSR-3C2V	5.7	5.5	6.5	5.5	5.0	5.0
1656-JSR-25C2V	4.5	4.5	5.5	4.5	3.8	5.0
1656-JSR-212	3.5	3.5	4.5	3.5	3.0	5.0

NO	DESCRIPTION	Q'TY	ITEM NO.	MATERIAL	PLATING
1	BODY 1	1	12-222	BRASS	COLD 3-
2	BODY 2	1	12-222	BRASS	NICKEL
3	DIELECTRIC 1	1	T-060044	TEFLON	-
4	DIELECTRIC 2	1	D-060043	DELRIN	-
5	CENTER PIN	1	12-222	BRASS	COLD 3-
6	NUT	1	N-11007	BRASS	NICKEL
7	CLAMP	1	CL-08001.02.03	BRASS	NICKEL
8	WASHER	1	W-07001	BRASS	COLD 3-
9	CIR NUT	1	Cn-06001	BRASS	NICKEL
10	PARTS	1	Pa-10002.03.04	BRASS	NICKEL
11	RING	1	R-10003.04.05	BRASS	NICKEL

RoHS Compliant

MORETHANALL PCB CONNECTORS Cable ASSEMBLIES

煜倫股份有限公司

www.morethanall.com

DRAWING BY CY	
CHECKED BY GENIUS	
UNIT / mm	SCALE 1 : 1
DATE	
SIZE A4	PPOJECTION

TOLERANCES ARE

X. ±
.X ± 0.2
.XX ± 0.1
.XXX ±
ANG ±

照片框

ORDER INFORMATION

1656-JSRPBNW-xxx-LF

SERIES
JACK
SOLDER
90°
PANEL
NUT
BACK
WASHER
3C2V
25C2V
212
LEADFREE

DESCRIPTION: RICHT ANGLE JACK CLAMP